DYNESS

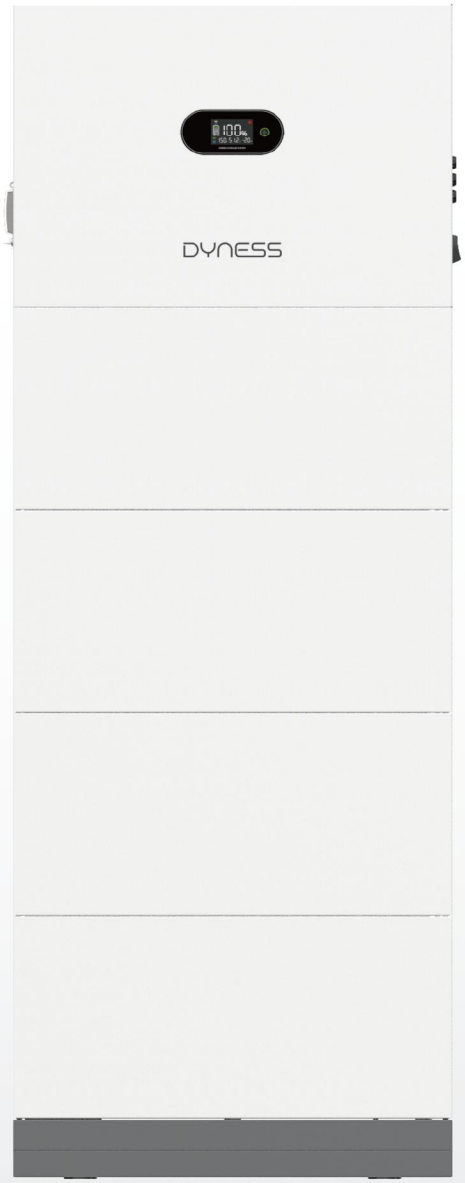

Cygni Series

USER MANUAL

Energy Storage System
Cygni8.0HS-M2/M3/M4/M6/M8/M9/M12
Cygni10.0HS-M2/M3/M4/M6/M8/M9/M12

Contents

1 Note On This Manual 3
1.1 Applicable Model 3
1.2 Target Group 3
1.3 Symbol Definition 4
2 Safety 5
2.1 Statement 5
2.2 Safety Instructions 5
2.3 Symbols On The Label 6
3 Product Introduction 7
3.1 Product Overview 8
3.2 Interface Definition of Inverter 9
3.3 Interface Definition of Battery Hub 10
3.4 Interface Definition of Battery Module 12
3.5 LCD Display 13
3.6 System status indicator 14
3.7 Battery Status Indication 15
3.8 System Operation 15
4 Product Installation 17
4..1 Scope of Delivery 17
4.2 Storage 19
4.3 Unpacking and Inspection 19
4.4 Installation Requirements 20
4.5 Product Installation 23
5 Electrical Connection 38
5.1 System connection diagram 38
5.2 Cables prepared by customers 38
5.3 Wiring 38
5.4 Disconnect the PV connector using an MC4 wrench 41
5.5 Connect the AC wiring terminals to the corresponding AC Grid ports 42
5.6 METER/CT Connection 44
5.7 COM-Multi function communication connection 46
5.9 Smart Meter/CT Wirings Diagram 48
5.10 Equipment commissioning 48
5.11 Installation Instructions for the WiFi Module 50
6 Quick Settings 54
7 System Maintenance 56
7.1 Routine Maintenance 56
7.2 Troubleshooting 57
7.3 Error Messages. 58

7.4 Disclaimer 59
8 Technical Specifications 61

Dyness APP

Download on the
App Store

Download on the
Google Play

APP Operation

*Maximum operating voltage is 600V.
According to the local grid regulation
Can be reached only if PV and battery power is enough

Copyright of this document belongs to Dyness Digital Energy Technology Co., LTD.

No part of this documentation may be excerpted, reproduced, translated annotated or duplicated in any form or by any means without the prior written authorization of Dyness Digital Energy Technology Co.,LTD. All Rights Reserved.

This product complies with the design requirements of environmental protection and personal safety. The storage, use and disposal other products shall be carried out following the product manual, relevant contract or relevant laws and regulations.

Customers can check the related information on the website of Dyness Digital Energy Technology Co., LTD. when the product or technology is updated.

1 Note On This Manual

1.1 Applicable Model

Model

This manual applies to the listed products below:

Cygni Series: Inverter & Battery pack

Cygni 8.0HS-M2 Cygni 8.0HS-M3 Cygni 8.0HS-M4

Cygni 10.0HS-M2 Cygni 10.0HS-M3 Cygni 10.0HS-M4

Cygni 8.0HS-M6 Cygni 8.0HS-M8 Cygni 8.0HS-M9

Cygni 10.0HS-M6 Cygni 10.0HS-M8 Cygni 10.0HS-M9

Cygni 8.0HS-M12

Cygni 10.0HS-M12

Model description

Cygni 8.0HS-M2



1 2 3 4

No.	Referring to	Explanation
1	Equipment Type	Cygni: Product Series
2	Rated Power	8.0: the rated power is 8kW 10.0: the rated power is 10kW
3	Category	HS: Hybrid Single-phase product
4	Battery Pack No.	M2: the number of Battery pack is 2 M3: the number of Battery pack is 3 M4: the number of Battery pack is 4 M6: the number of Battery pack is 6 M8: the number of Battery pack is 8 M9: the number of Battery pack is 9 M12: the number of Battery pack is 12

1.2 About this manual

This Document mainly describes the information and guidelines for installation, operation and maintenance of Cygni systems in this manual, which cannot include complete information about the photovoltaic (PV) system.

Target Group

This manual is intended for:

- Qualified personnel who are responsible for the installation and commissioning of the product;
- Product owners will have the ability to interact with the product.

How to Use This Manual

Read the manual and other related documents before performing any operation on the product. Documents must be stored carefully and be available at all times.

Contents may be periodically updated or revised due to product development. The information in this manual is subject to change without notice. The latest manual can be acquired at www.dyness.com.

1.3 Symbol Definition

The Cygni series has been designed and tested strictly according to international safety regulations. Read all safety instructions carefully before any work and observe them at all times when working on or with the product. Operation and maintenance, as any improper operation might cause personal injury or property.

	DANGER indicates a hazardous situation which, if not avoided, may encounter profound injury or even death.
	WARNING indicates a hazardous situation which, if not avoided, could result in death or critical injury.
	CAUTION indicates a hazardous situation which, if not avoided could undergo a life-threatening injury.
	Indicates warning information about device or environment security which, if not avoided, could result in equipment damage, data loss, performance deterioration, or unanticipated results. NOTICE is used to address practices not related to personal injury.

1.4 Revision History

Version	Date	Description
V3.0	2026.7.23	Add the equipment height information in 3.1 Product Overview.
V2.0	2026.7.14	• Update cover rendering image. • Add chapter 5.12 multi-unit parallel Installation Instructions.
V1.0	2026.4.15	Initial Release

©Dyness reserves the copyright of this document.

2 Safety

2.1 Statement

- Contents may be periodically updated or revised due to product development. The information in this guide is subject to change without notice. In no circumstances does this guide serve as a replacement for any accompanying notes pertaining to the device.
- Make sure to read over, fully understand and strictly follow the detailed instructions of the user manual and other related regulations before installing the equipment. The user manual can be downloaded by visiting the website at www.dyness.com; or it can be obtained by scanning the QR code on the side of the equipment or the back cover of this guide.
- The product has been designed and tested strictly according to international safety regulations.
- Read all safety instructions carefully before any work and observe them at all times when working on or with the product. Incorrect operation or work may cause injury or death to the operator or a third party; damage to the product and other properties.
- Any violation could result in personal death or even device damage and will void the warranty.

2.2 Safety Instructions

DANGER

- Never insert or remove the AC or DC connections when the product is running.
- Before making any wiring connections or performing electrical operations on the product, all DC and AC power must be disconnected from the product for at least 5 minutes to ensure that the product is totally isolated to avoid electric shock.
- Do not open the product cover or change any components without the manufacturer's authorization. Otherwise, the warranty for the product will be invalid.
- PV negative (PV-) and battery negative (BAT-) on the product side are not grounded as the default design. Connecting either PV- or BAT- to EARTH is strictly forbidden.
- The cable used must be intact and well-insulated. Operation personnel must wear proper personal protective equipment (PPE) all the time.

WARNING

- Any installation or operations on the product must be performed by qualified electricians in compliance with standards, wiring rules and the requirements of local grid authorities or companies
- The temperature of the product surface can exceed 60°C during operation. Ensure it has cooled down before touching it, and the product is out of reach of children.
- Do not open the product cover or change any components without the manufacturer's authorization. Otherwise, the warranty for the product will be invalid.

- The usage and operation of the product must follow the instructions in this User Manual. Otherwise, the protection scheme might be impaired and the warranty for the product will be invalid.
- The product, with a built-in RCMU, will prevent the possibility of DC residual currents up to 6mA. Thus, in the system, an external RCD (type A) can be used (≥30mA).
- Before installation, check that the package contents are intact and complete compared to the packing list. Contact DYNESS or the distributor in case of any damaged or missing components.
- The cable used must be intact and well-insulated. Operation personnel must wear proper personal protective equipment (PPE) all the time.

2.3 Symbols On The Label

Symbol	Explanation
	Disconnect the product from all the external power sources before maintenance Failure to observe any warnings contained in this manual may result in injury.
	Danger to life due to high voltages!
	Hot surface! Burn danger due to hot surface that may exceed 60
	The components of the product can be recycled.
	Products shall not be disposed as household waste.
	Refer to the operating instructions.
	Do not touch live parts for 5 minutes after disconnection from the power sources.
	TUV SUD

Limited by the temperature of the battery, the energy storage system downgraded uses the rated maximum operating ambient temperature 50 °C for outdoor unconditioned with solar effects.

©Dyness reserves the copyright of this document.

3 Product Introduction

The main function of the Cygni storage system is to store the power generated by PV panels in battery, or convert DC power from PV panels or battery into AC power for the use of loads or for feeding to grid. Cygni Hybrid is mainly for initial-installations and Cygni AC Couple mainly for retrofittings or stand-along battery systems.



WARNING

- The inverter off-grid mode switch time is around 10ms. The device is not suitable for equipments that requires uninterrupted power supply, such as medical equipment etc. in case of any personal or economic losses.
- Please make sure the inrush current of consumers on backup side is within the stand range on backup power supply spec. of the inverter. Otherwise the inverter might stop working because of backup overloading.
- BACK-UP is not recommended if the PV systems do not configure with a battery. Otherwise, the risk in system power usage is beyond the equipment manufacturer's warranty scope. Environmental factors such as ambient temperature, humidity etc. may limit the battery's current and affect its loading capacity.
- Overloading on backup side will lead to inverter shutdown and report failure automatically. So please make sure the backup load power is lower than inverter rated power during off-grid mode.
- When the inverter is in off-grid mode, it can be used for normal household loads,
- such as:
  - Inductive load: 8.0-10.0kW inverter supports 2P non-inverter air conditioner;
  - capacitive load: the total power is no more than 0.66 times the inverter's rated output power.

3.1 Product Overview

NOTICE
● Due to product upgrades and other reasons, the appearance of this product may be adjusted. Please refer to the actual shipped product for details. ● A Battery Hub must be configured when two or more battery clusters are connected in parallel to a single inverter for energy storage capacity expansion.

Appearance

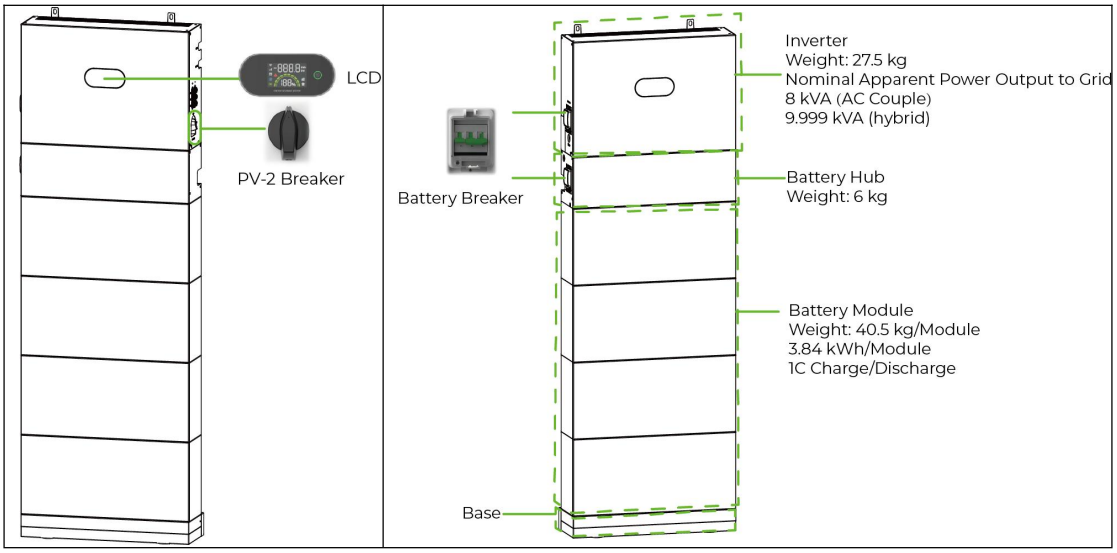

Dimension

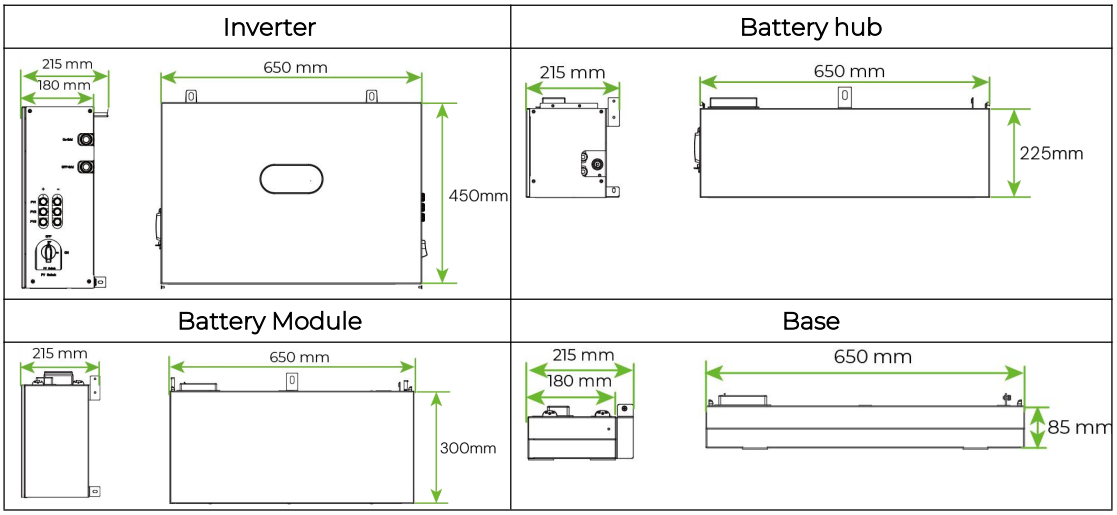

©Dyness reserves the copyright of this

3.2 Interface Definition of Inverter

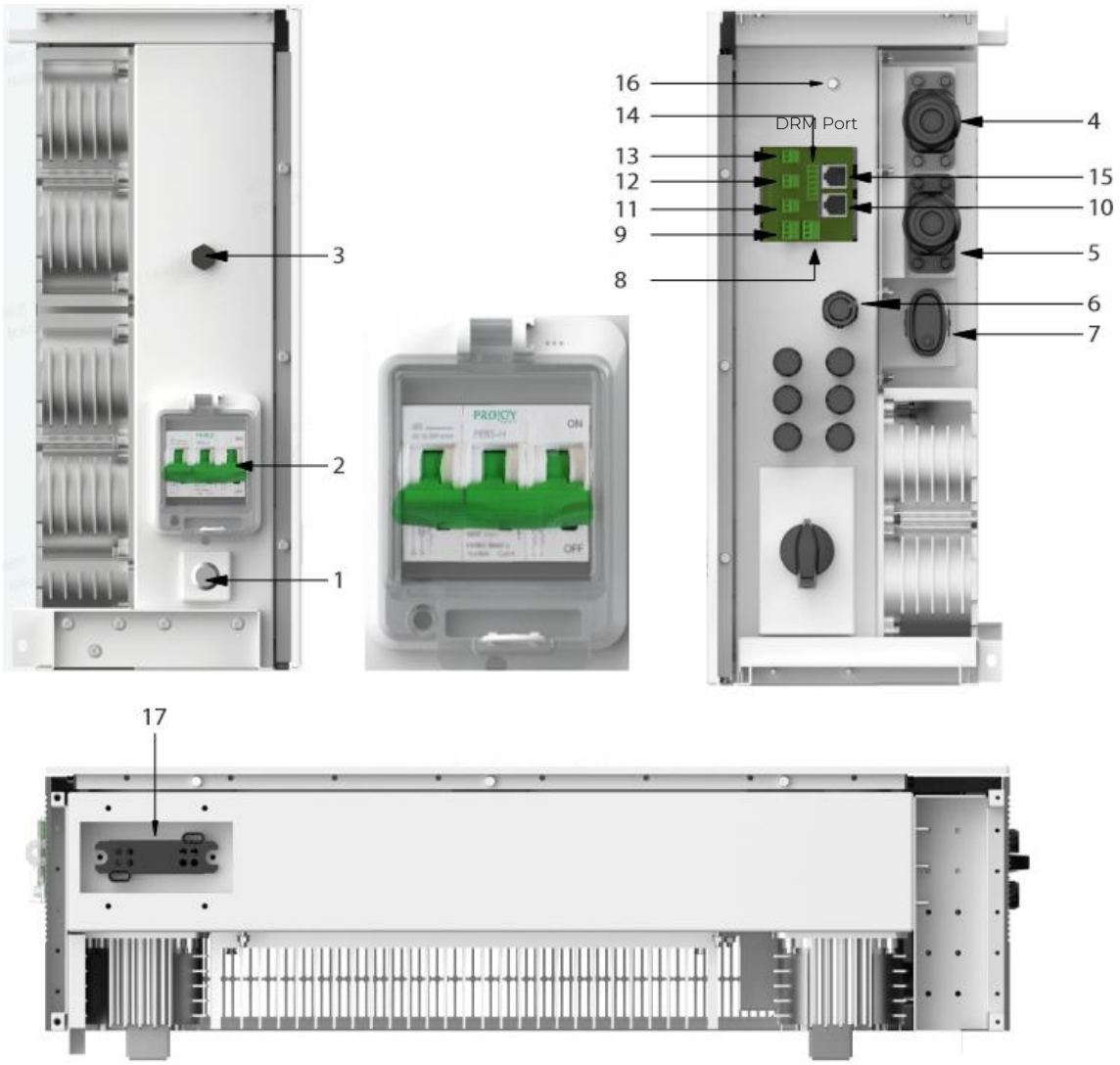

Item	Name	Definition
1	Wakeup Button	Turn on the connection of battery and inverter
2	Battery Isolator	Control the battery on and off
3	Breather valve	Waterproof and breathable
4	AC Output Terminal (On-grid)	Grid connection port
5	AC Output Terminal (Backup)	Backup load connection port
6	METER/CT	Communication to Meter
7	Communication terminal	Adaptive communication module
8	DRY_OUT1	Communication interface
9	DRY_OUT2	Communication interface
10	Parallel_1	Communication interface
11	SCD	Communication interface
12	EMS	Communication interface

13	IO_IN	Communication interface
14	DRM Port	Communication interface
15	Parallel_2	Communication interface
16	Ground nut	Ground connection
17	Composite connector-Socket	Battery module output and communication interface

Difference Between Hybrid inverter and AC Couple Inverter

Cygni Hybrid

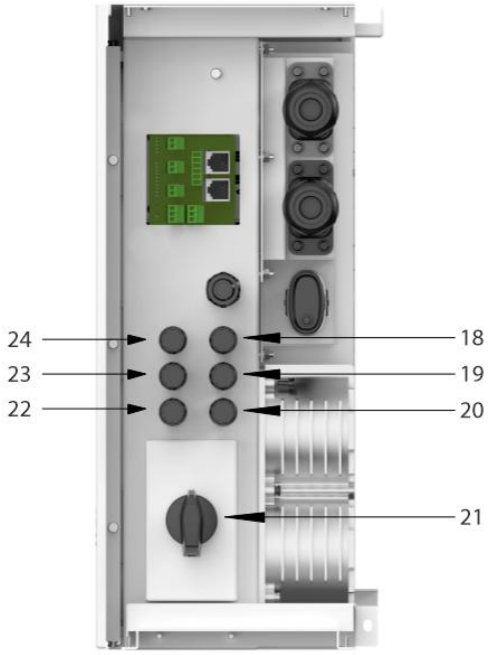

Cygni AC Couple

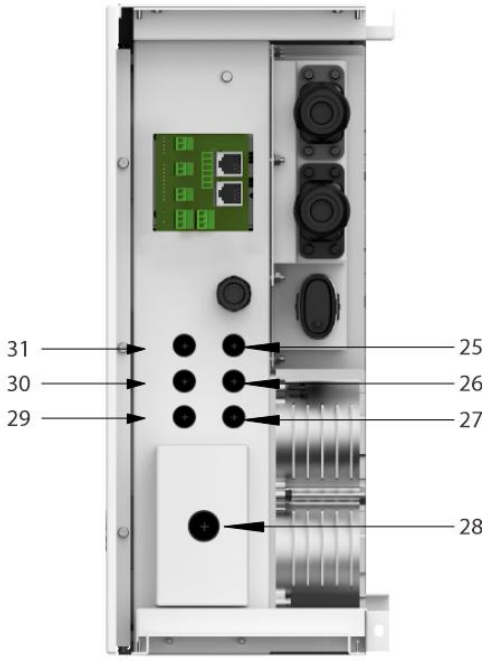

Item	Name	Definition
18	Male PV terminal 1	PV input 1-
19	Male PV terminal 2	PV input 2-
20	Male PV terminal 3	PV input 3-
21	DC switch	Control the PV on and off
22	Female PV terminal 1	PV input 1+
23	Female PV terminal 2	PV input 2+
24	Female PV terminal 3	PV input 3+
25	M12 Screw Plugs	SPM1209B
26	M12 Screw Plugs	SPM1209B
27	M12 Screw Plugs	SPM1209B
28	M16 Screw Plugs	SPM1612B
29	M12 Screw Plugs	SPM1209B
30	M12 Screw Plugs	SPM1209B
31	M12 Screw Plugs	SPM1209B

©Dyness reserves the copyright of this document.

3.3 Interface Definition of Battery Hub

Battery Hub is for the scenario of expanding the battery clusters.

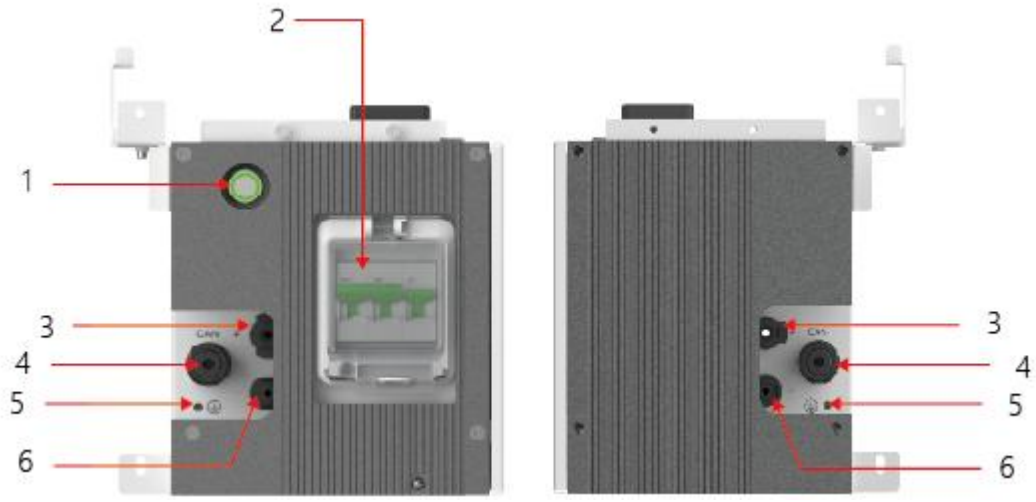

NO.	PART	NO	PART
1	Push-button switch	4	Communication terminal
2	Micro-breaker switch	5	GND
3	BAT+	6	BAT-

Note: Do not disrupt the order, otherwise it may cause machine damage

Power On: First, push the "breaker switch" in icon 2 to "on". Then, long press the "switch" in icon 1 for 5 seconds.

Power Off: First, long press the "switch" in icon 1 for 5 seconds. Then, push the "breaker switch" in icon 2 to "off".

3.4 Interface Definition of Battery Module

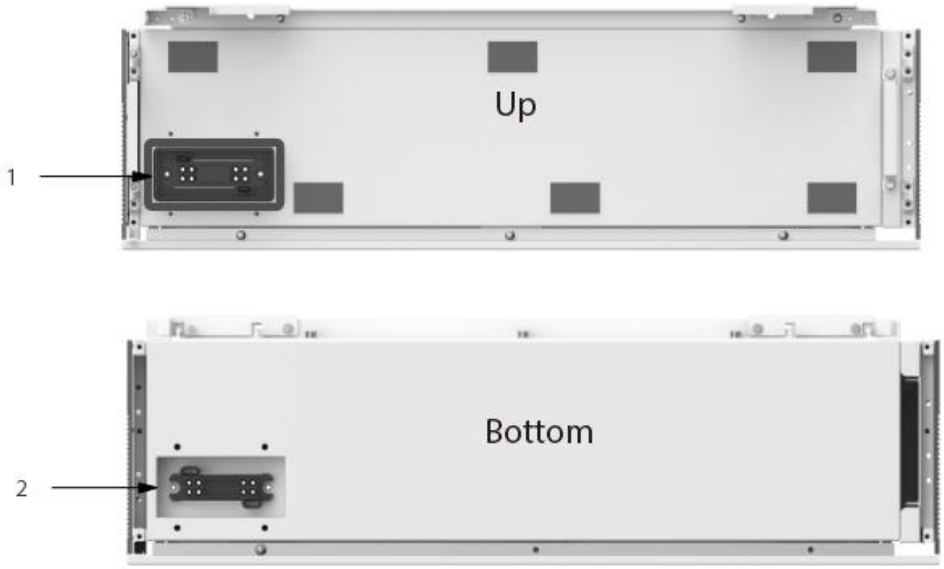

Item	Name	Definition
1	Battery terminal 1	Battery input 1-
2	Battery terminal 2	Battery input 2-

©Dyness reserves the copyright of this document.

3.5 LCD Display

Buttons and indicator lights

The LED indicator on the front of the product can indicate the current working state of the product.



Icon	Indications	Status		
		Burning	Off	Flash
	Wi-Fi	Normal and Connected to Internet	Not connected	
	Backup Load	Connected well and running	Not connected	
	Solar Operation	Connected well and running	Not connected	
	Battery	Well Connected and Discharging	Not connected or Fault	BMS Communication loss
	Utility Connection	Well Connected	Not connected or Fault	
	System Health	System Out of Condition	System Running Well	
	Battery SOC Charge/Discharge Status Indications			
	Touch Button			

3.6 System status indicator

For more than 1 minute, the keys have no operation to turn off the screen, press the screen to wake up the screen after the screen is turned off. The key is not operated within 30 seconds to return to the default display

System Status	Display Statues		Explanations
Current AC power (default)		888.8 KW	Value + (k)W
Power generation of the day		888.8 KWh	Value + kWh
 Load status	Flashing	888.8 KW	Total load power
		888.8 KWh	Energy Consumed of the Day
 Battery status	Flashing	-888.8 KW	Battery Charging Power
		888.8 KW	Battery Discharging Power
		-888.8 KWh	Battery Charged Energy of the Day
		888.8 KWh	Battery Discharged Energy of the Day
 PV status	Flashing	888.8 KW	Solar Production Power
 Grid status	Flashing	888.8 KW	Power Exporting to Grid
		-888.8 KW	Power Importing from Grid
		-888.8 KWh	Energy Consumed from Grid of the Day
		888.8 KWh	Energy Exported to Grid of the Day
	Burning	E00	Multiple faults switchs every 3s
		E00	System Fault
		888.8 KW	System Running
		888.8 KW	Wait/Checking
			Firmware Upgrading

©Dyness reserves the copyright of this document.

3.7 Battery Status Indication



3.8 System Operation

Supported Grid Types

The inverter supports grid types as follows:

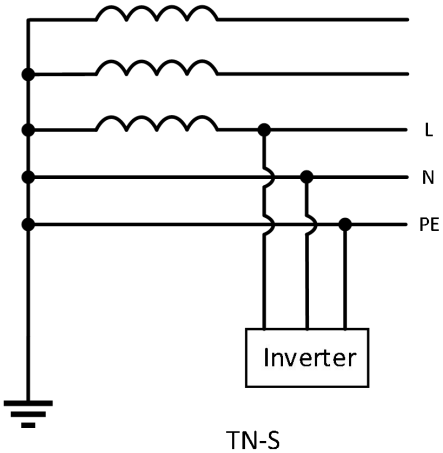

TN-S

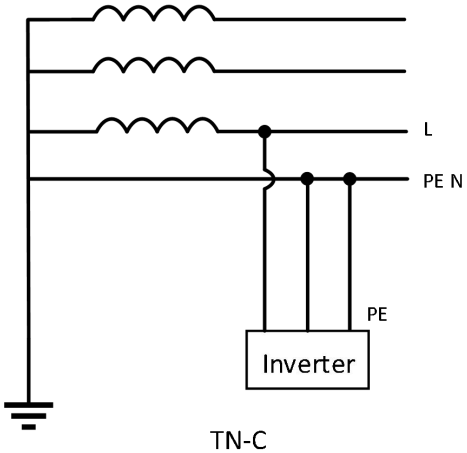

TN-C

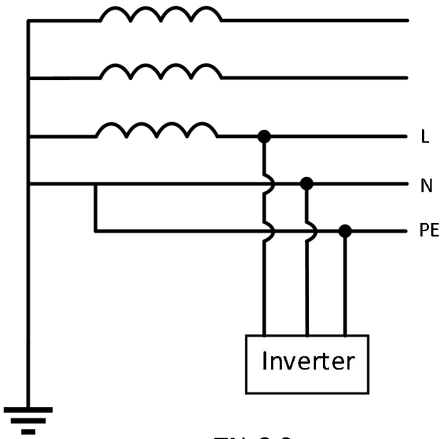

TN-C-S

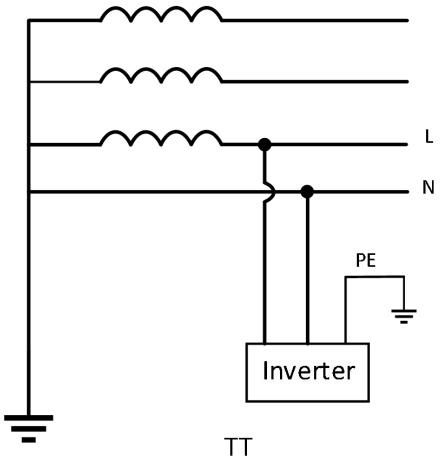

TT

System Operation Status

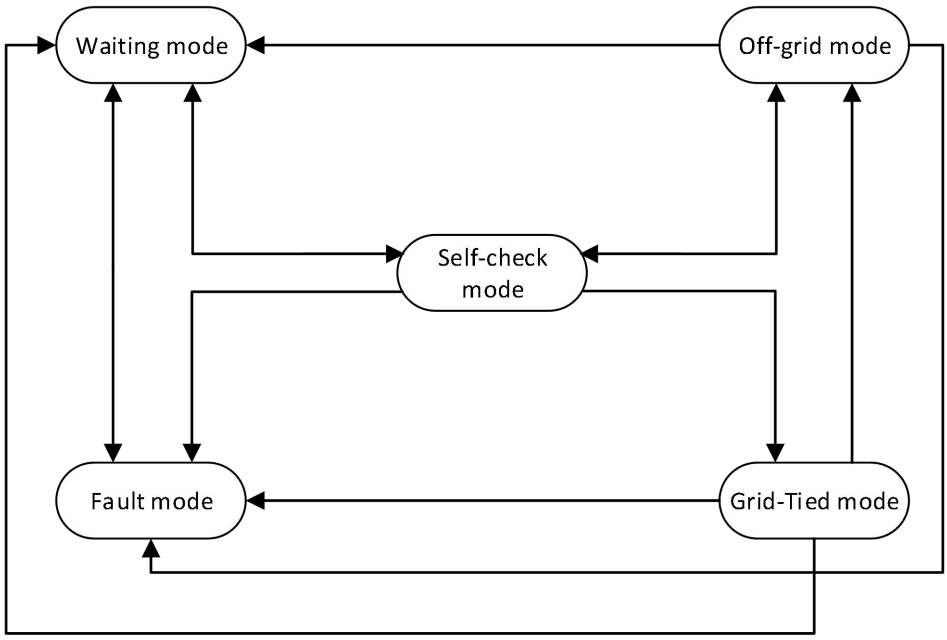

No.	Parts	Description
1	Waiting mode	Product stand by after powering on. Product will start self-check or enter fault mode if there is any system unconditioning.
2	Self-check mode	Under self-check mode, product performs an overall self-check on system condition, after which, product enter grid-tie mode or off-grid mode according to utility connection status, enter waiting mode if off-grid function closed during utility absence, or switch to fault mode if a fault condition detected.
3	Grid-Tied mode	Product connects to utility successfully and operate normally. Product will switch to off-grid mode if utility is absent and further might to wait mode if off-grid function turned off, or switch to fault mode if a fault condition detected.
4	Off-Grid mode	Product operate without utility access, but still be able to supply backup loads if off-grid function turned on, or switch to wait mode if off-grid function turned off. As utility accessibility recover, product switches to grid-tie mode.
5	Fault mode	If a fault is detected, the product enters the fault mode. When the fault is cleared, it enters the wait mode.

©Dyness reserves the copyright of this document.

4 Product Installation

4.1 Scope of Delivery

In the inverter box



A

Electrical Connection Connectors:



B



C



D



E



F



System Assembling Parts:



G

Screws:



H



I



J



K



L

Others:



Instructions



M



N



O

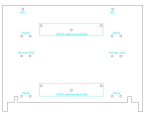

P



Q



R



S

Item	Description	Quantity	Item	Description	Quantity
A	Inverter	1PCS	K	Hanging Rack	2PCS
B	AC Connector	2PCS	L	M4x10 screw	4PCS
C	Male PV Connector	3PCS	M	Wi-Fi Module	1PCS
D	Female PV Connector	3PCS	N	Meter	1PCS
E	Earth Terminal	1PCS	O	METER/CT wire	1PCS
F	METER/CT Connector	1PCS	P	Positioning Plate	1PCS
G	Cover Plate	1PCS	Q	Expansion Bolts	2PCS
H	M4x10 screw	5PCS	R	PLTB1.5-02-B-3.5	3PCS
I	M5x10 screw	2PCS	S	PLTB1.5-03-B-3.5	2PCS
J	Hanging panel	2PCS			

In the battery hub

Item	Description	Quantity
A	Battery Hub Module	1PCS
B	Expansion bolts	4PCS
C	M4x8 screw	1PCS
D	M5x10 screw	2PCS
E	BAT Connector	4PCS
F	Earth Terminal	1PCS
G	METER/CT Connector	1PCS
H	Termination Resistor	1PCS

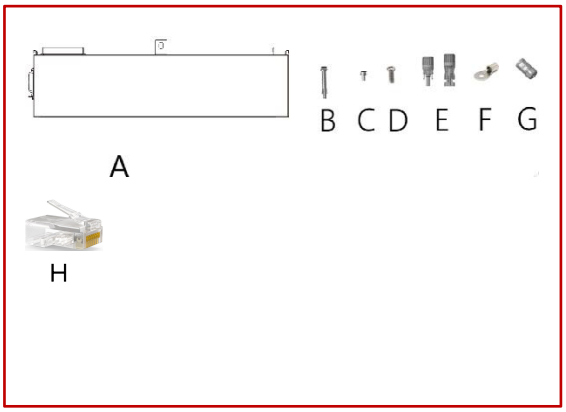

In the battery box

Item	Description	Quantity
A	Battery Module	1PCS
B	Expansion bolts	4PCS
C	M3x12 screw	1PCS
D	M5x10 screw	2PCS

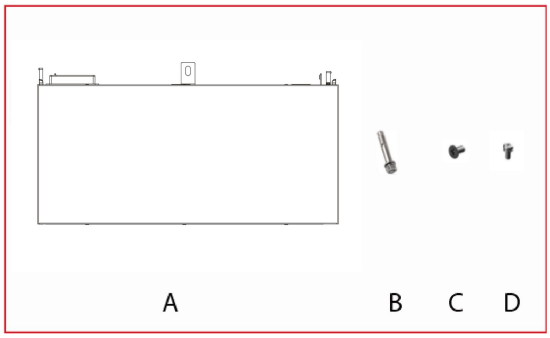

In the Base

Item	Description	Quantity
A	Base	1pcs
B	Adjustable Feet	4pcs

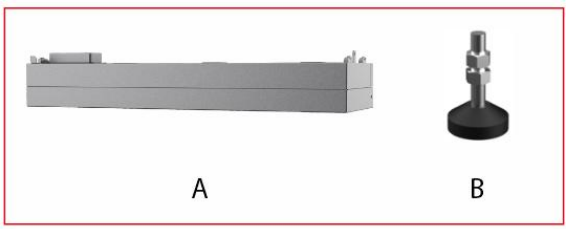

©Dyness reserves the copyright of this document.

In the base wall-mounting kit box (Optional)

Item	Description	Quantity
A	Wall-mounting pallet	1PCS
B	M12x25 screw	4PCS
C	Expansion bolts	4PCS

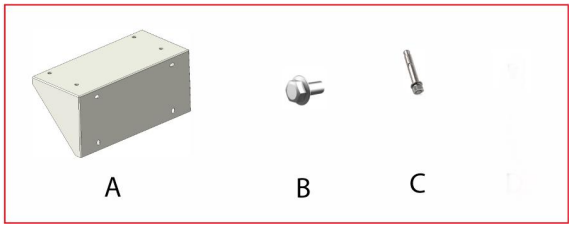

4.2 Storage

If the equipment is not to be installed or used immediately, please ensure that the storage environment meets the following requirements:

1. Do not unpack the outer package or throw the desiccant away.
2. Store the equipment in a clean place. Make sure the temperature and humidity are appropriate and no condensation.
3. The height and direction of the stacking products should follow the instructions on the packing box.
4. The products must be stacked with caution to prevent them from falling.
5. If the product has been long-term stored, it should be checked by a professional before being put into use.

4.3 Unpacking and Inspection

WARNING

Check all safety signs, warning labels and nameplates on devices.

Ensure that the safety signs, warning labels and nameplates must be clearly visible and cannot be removed or covered before the device is decommissioned.

After receiving the product, check whether the appearance and structural parts of the device are damaged, and check whether the packing list is consistent with the actual ordered product. If there are problems with the above inspection items, do not install the device and contact your distributor first. If the problem persists, contact DYNESS in time.

4.4 Installation Requirements

Environmental and angle requirement

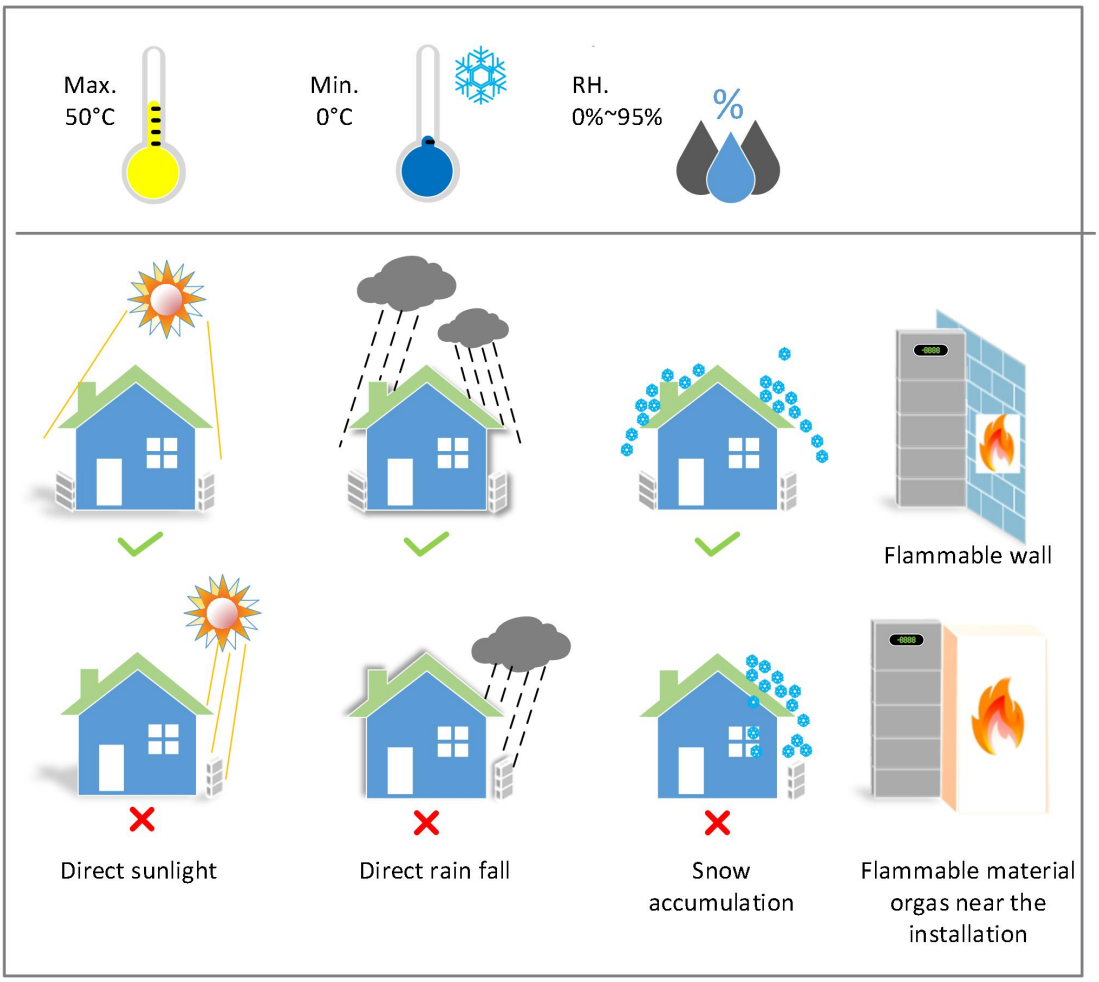

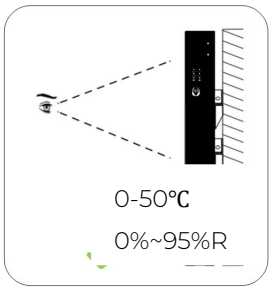



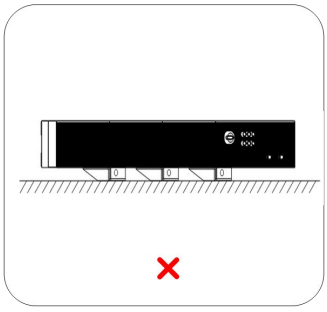

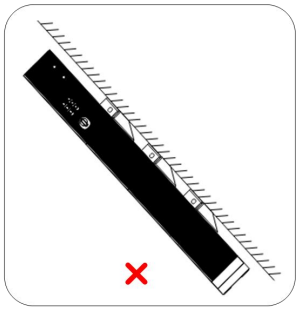

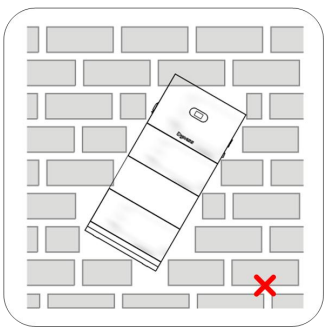

©Dyness reserves the copyright of this document.

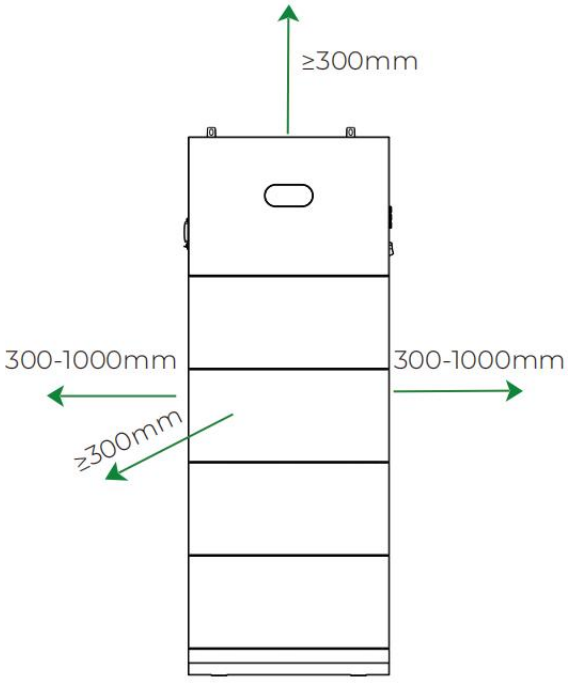
≥300mm
300-1000mm
300-1000mm
≥300mm

Installation Tools

The following tools are recommended when installing the requirement.

Use other auxiliary tools on-site if necessary.



CAUTION

- Servicing of batteries should be performed or supervised by personnel knowledgeable about batteries and the required precautions.
- When replacing batteries, replace with the same type and number of batteries or battery packs.
- General instructions regarding removal and installation of batteries.
- CAUTION: Do not dispose of batteries in a fire. The batteries may explode.
- CAUTION: Do not open or damage batteries. Released electrolyte is harmful to the skin and eyes. It may be toxic.
- CAUTION: A battery can present a risk of electrical shock and high short-circuit current. The following precautions should be observed when working on batteries:

a) Remove watches, rings, or other metal objects.
b) Use tools with insulated handles.
c) Wear rubber gloves and boots.
d) Do not lay tools or metal parts on top of batteries.
e) Disconnect the charging source before connecting or disconnecting the battery terminals.
f) Determine if battery is inadvertently grounded. If inadvertently grounded, remove source from ground. Contact with any part of a grounded battery can result in electrical shock. The likelihood of such shock can be reduced if such grounds are removed during installation and

©Dyness reserves the copyright of this document.

maintenance (applicable to equipment and remote battery supplies not having a grounded supply circuit).

4.5 Product Installation

4.5.1 Floor Mounting

- Step 1: Installation of the Base

Assemble the feet to the bottom of Base, adjust the feet height to ensure that the Base is even.

Assemble the feet.	Adjust the feet height.
	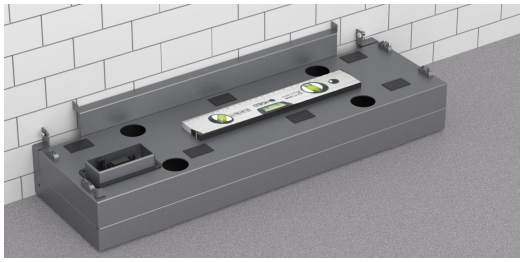

Feet Adjustment: Clockwise turn the adjustment Feed to lower down the base. Anticlockwise turn the adjustment Feed to lift up the base.

- Step 2：Drilling Holes for Tightening Battery Modules



Secure the positioning plate with screws



Mark hole point of first battery

A. Fix the positioning plate to the base, mark the first drilling positions
B. Follow the steps to mark the rest drilling positions
C. Drill holes following the requirements hereunder:

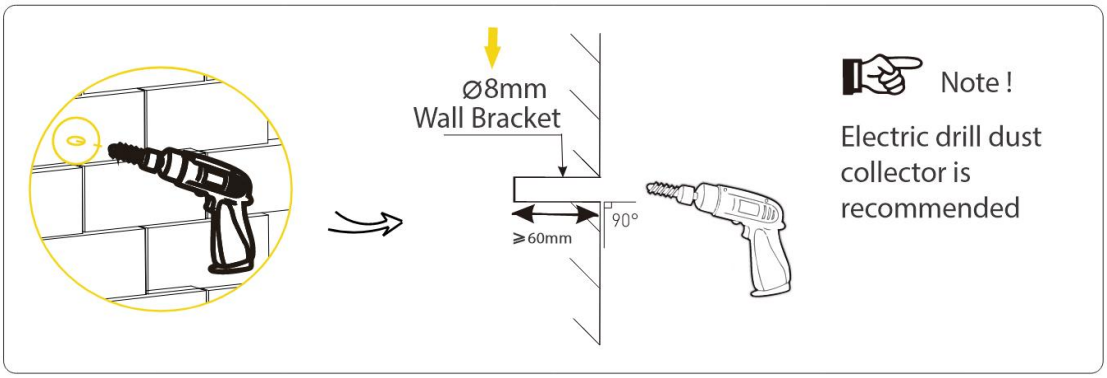

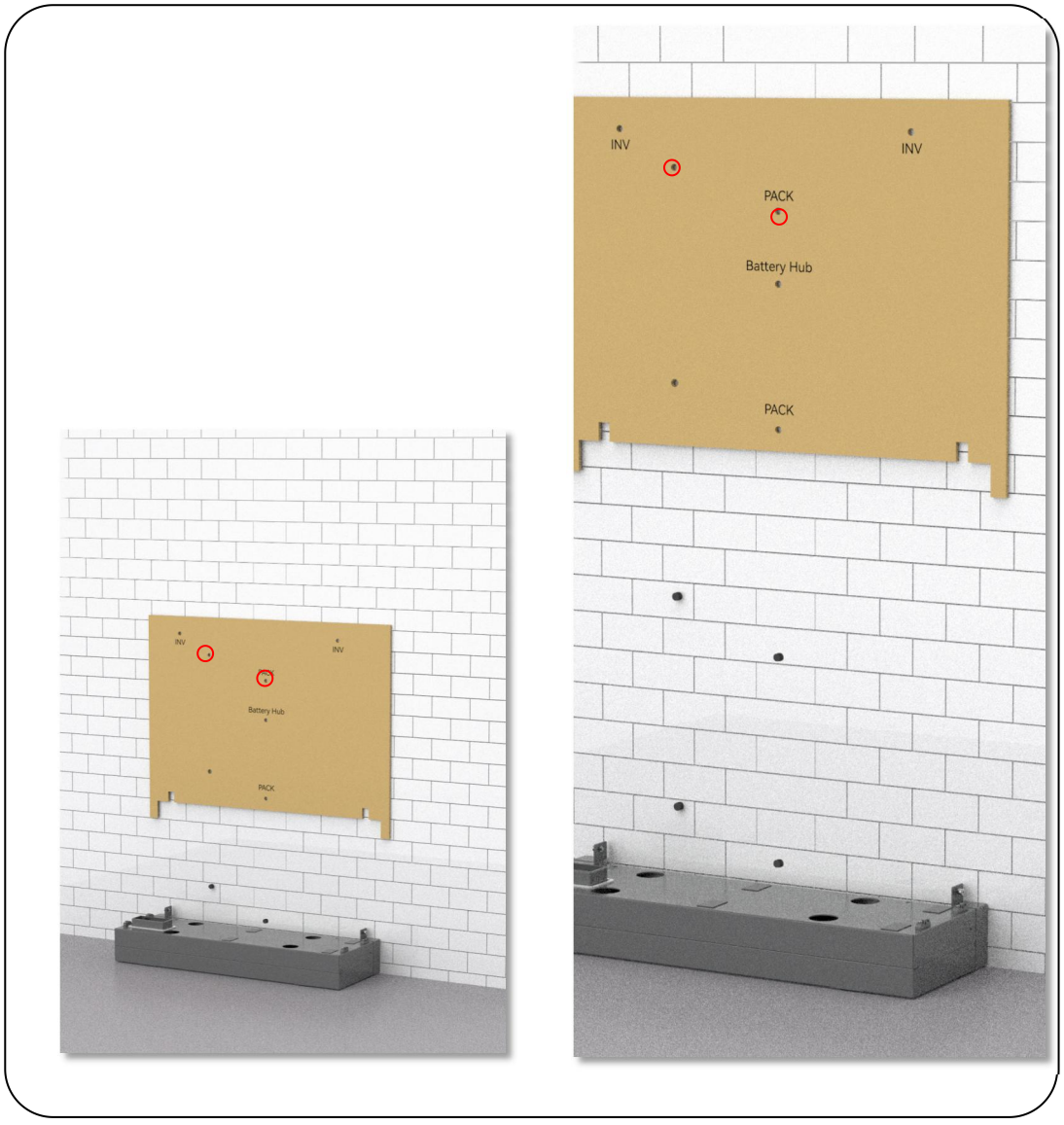

©Dyness reserves the copyright of this document.

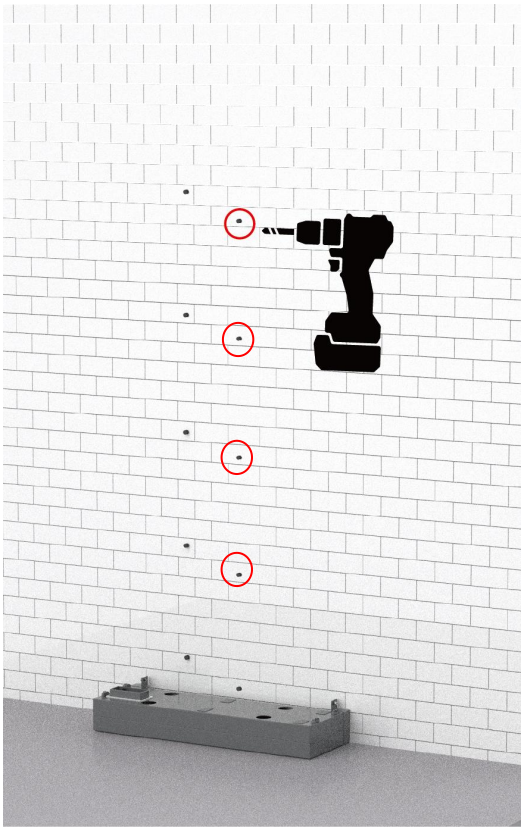

- Step 3: Assemble Battery Modules



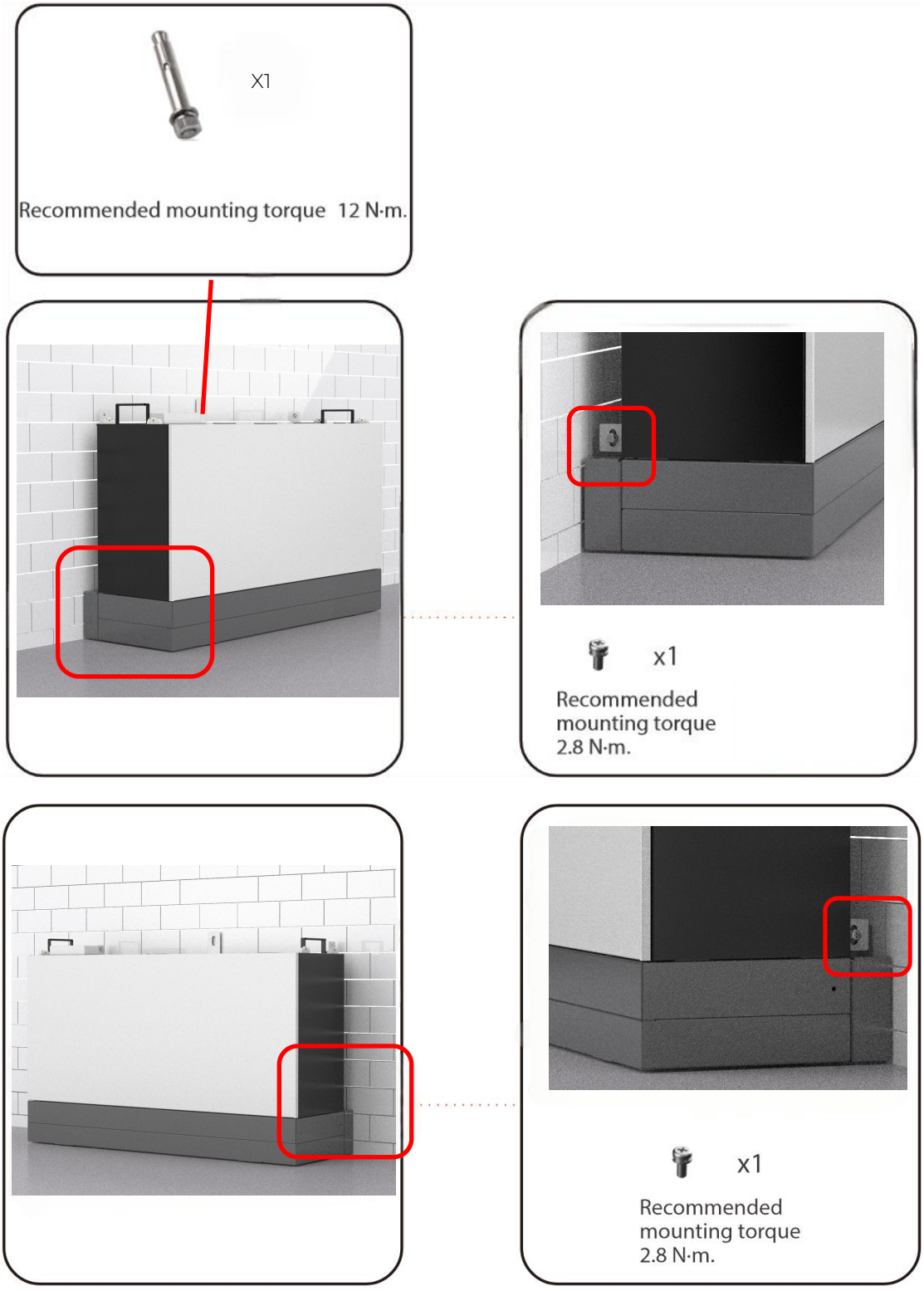

©Dyness reserves the copyright of this document.

Repeat step 3 until you have installed all the battery modules of battery packs.



Note:

The battery pack is very heavy. It requires 2 men to lift and install the battery module and inverter unit as well..

Step 4: Install Inverter Unit

Install the inverter on the battery pack, locking side screw.

Install the Hanging Rack on the inverter, locking expansion screws secure the wall mounting plates.

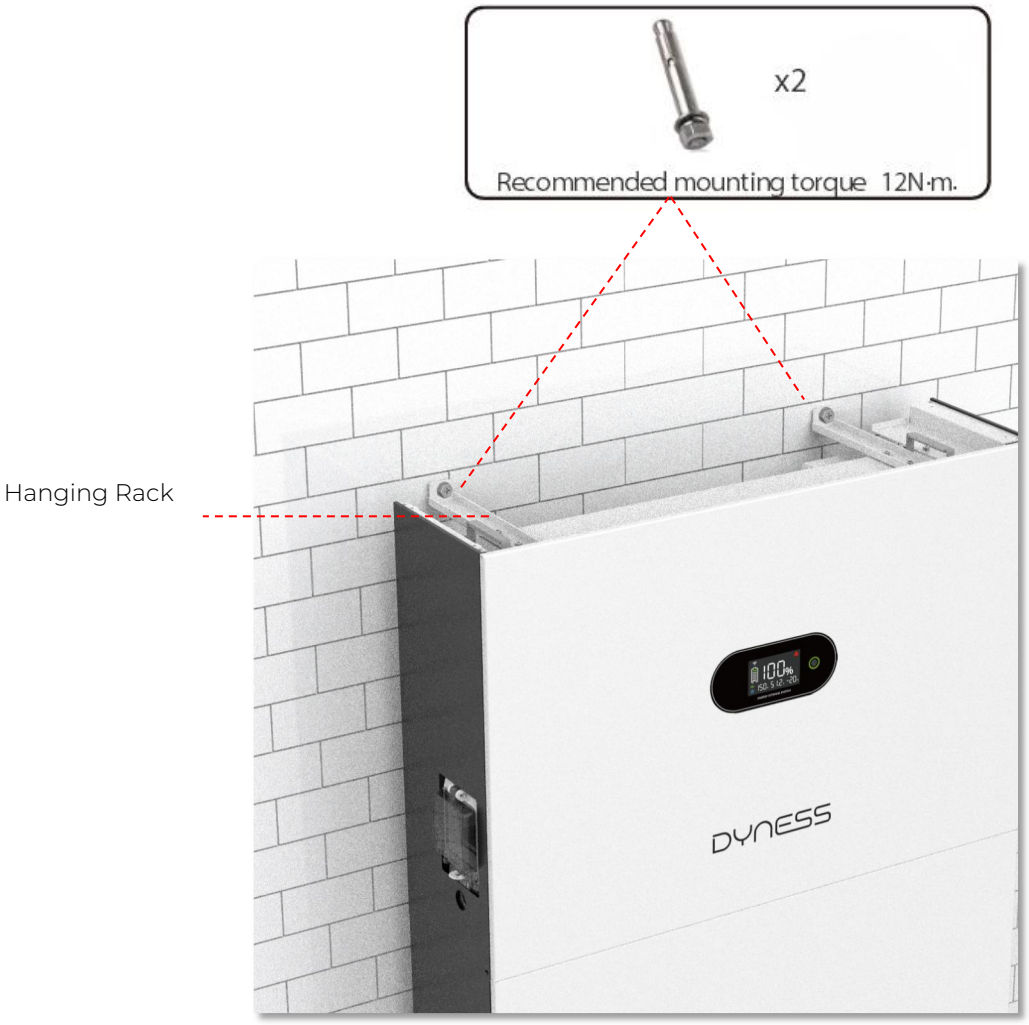

Note:

The battery pack is very heavy. It requires 2 men to lift and install the battery module and inverter unit as well.

©Dyness reserves the copyright of this document.

Install the sealing plate and cover plate upon completion of electrical and communication wirings.





Front-to-Back Installation

If installation space is limited, battery clusters can be installed in a front-to-back way as shown in the diagram. Connectors between battery clusters need be purchased separately.

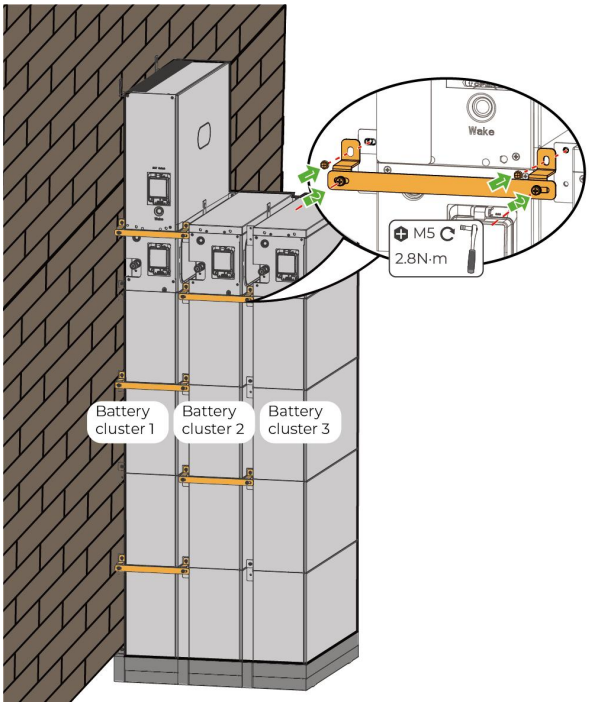

4.5.2 Wall Mounting

Place the Wall-mounting pallet against a wall Adjust the hole positions using a level.

Use a marker to mark holes for securing the battery modules and inverters based on the positioning plate.

- Step1

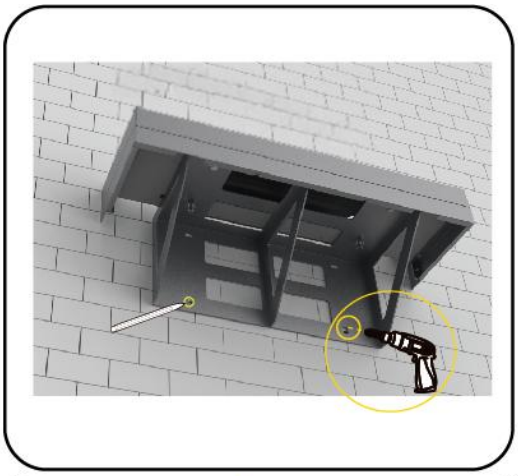



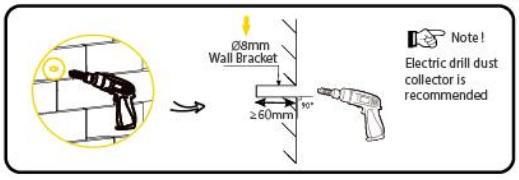



To install the pedestal, drill holes using a hammer drill (Φ8mm, depth range 60-65 mm), and tighten expansion screws to ensure that the base is securely installed.

Install the base on the Wall-mounting pallet, and then install the positioning plate.

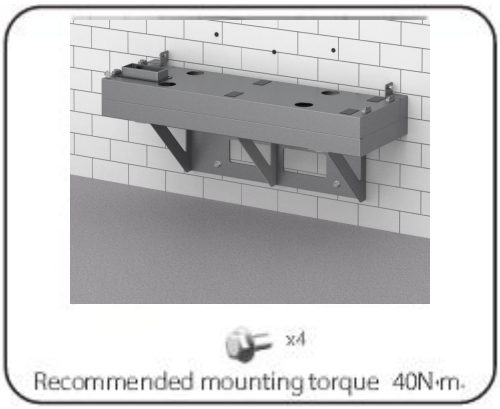

©Dyness reserves the copyright of this document.

- Step2

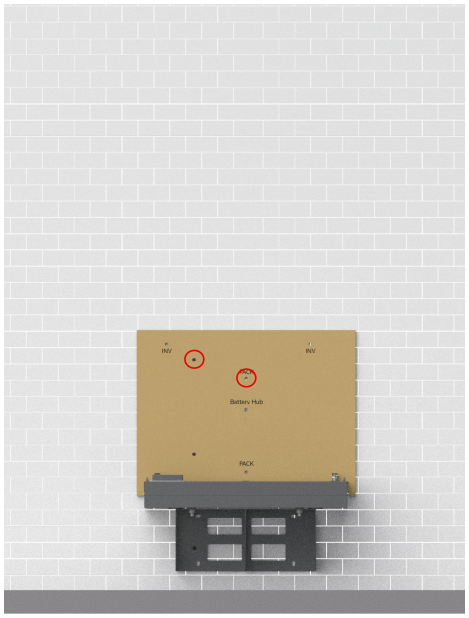
INV
INV
Battery Hub
PACK

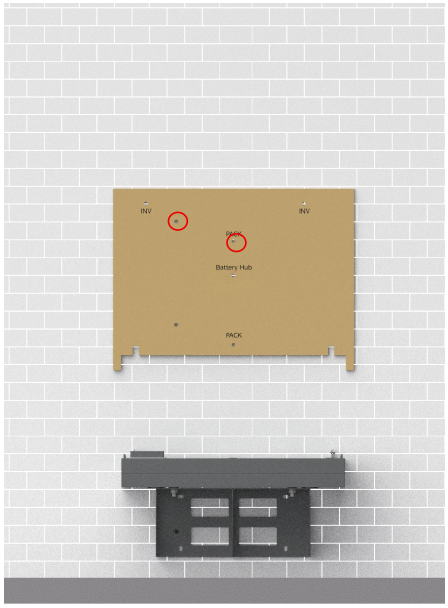
INV
INV
Battery Hub
PACK

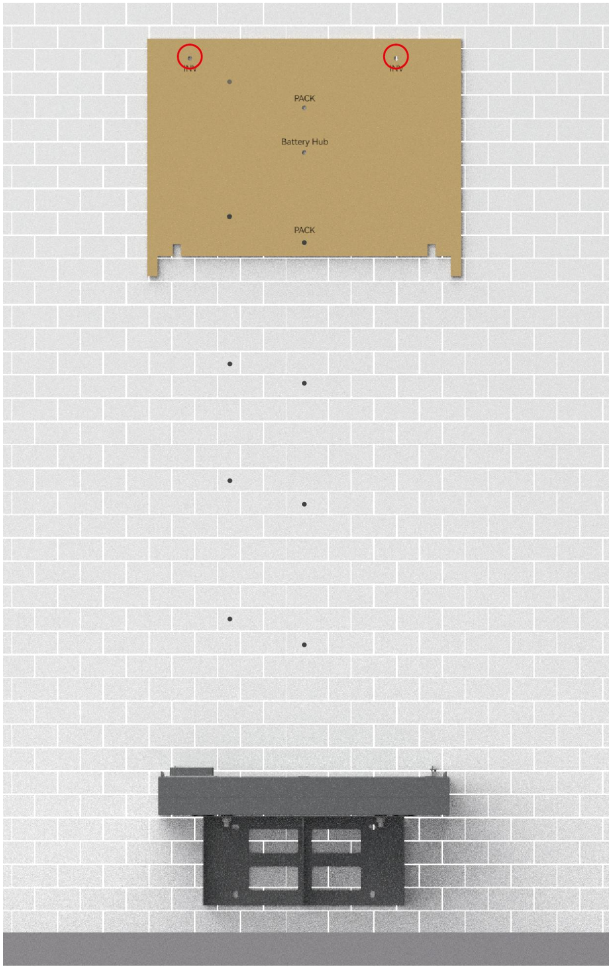
INV
INV
PACK
Battery Hub
PACK

- Step3

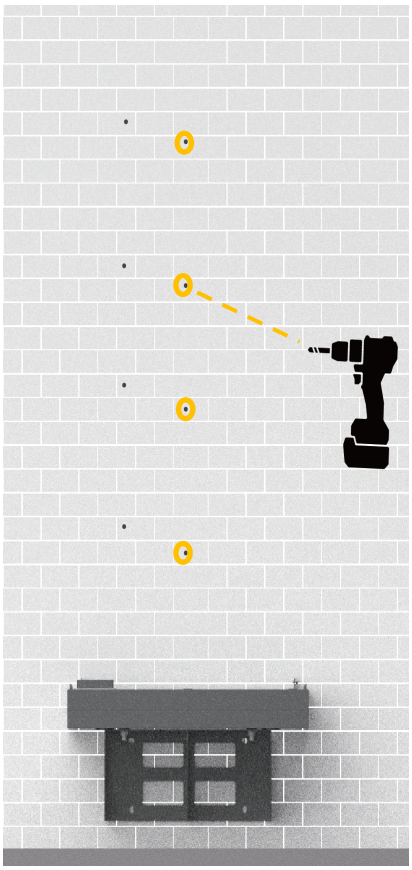

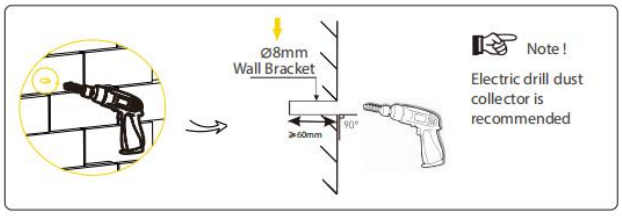

- Step4



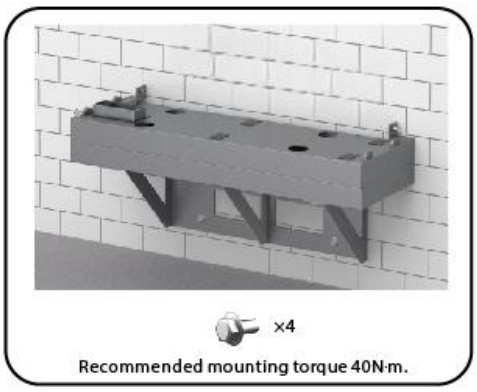

- Step5

©Dyness reserves the copyright of this document.

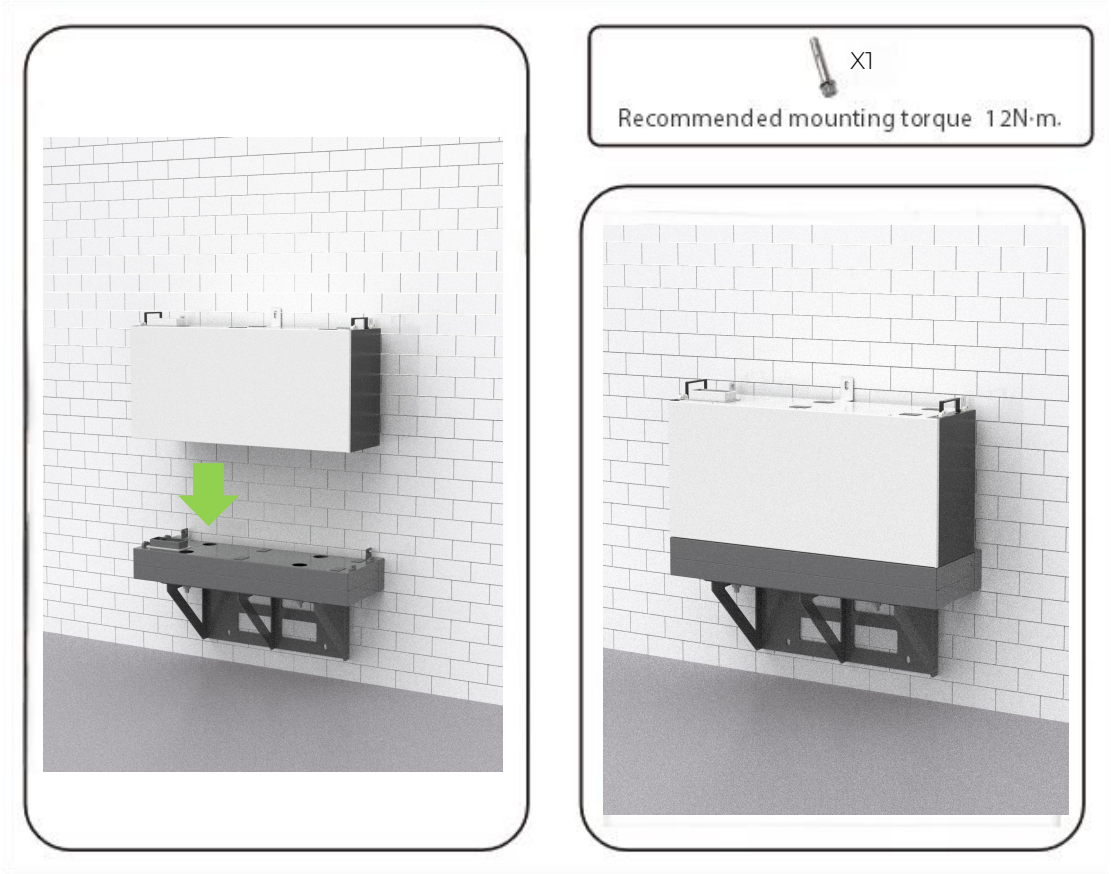

Note:

The battery pack is very heavy. Please use proper lifting techniques to avoid potential injury. It is recommended that two people lift the inverter.

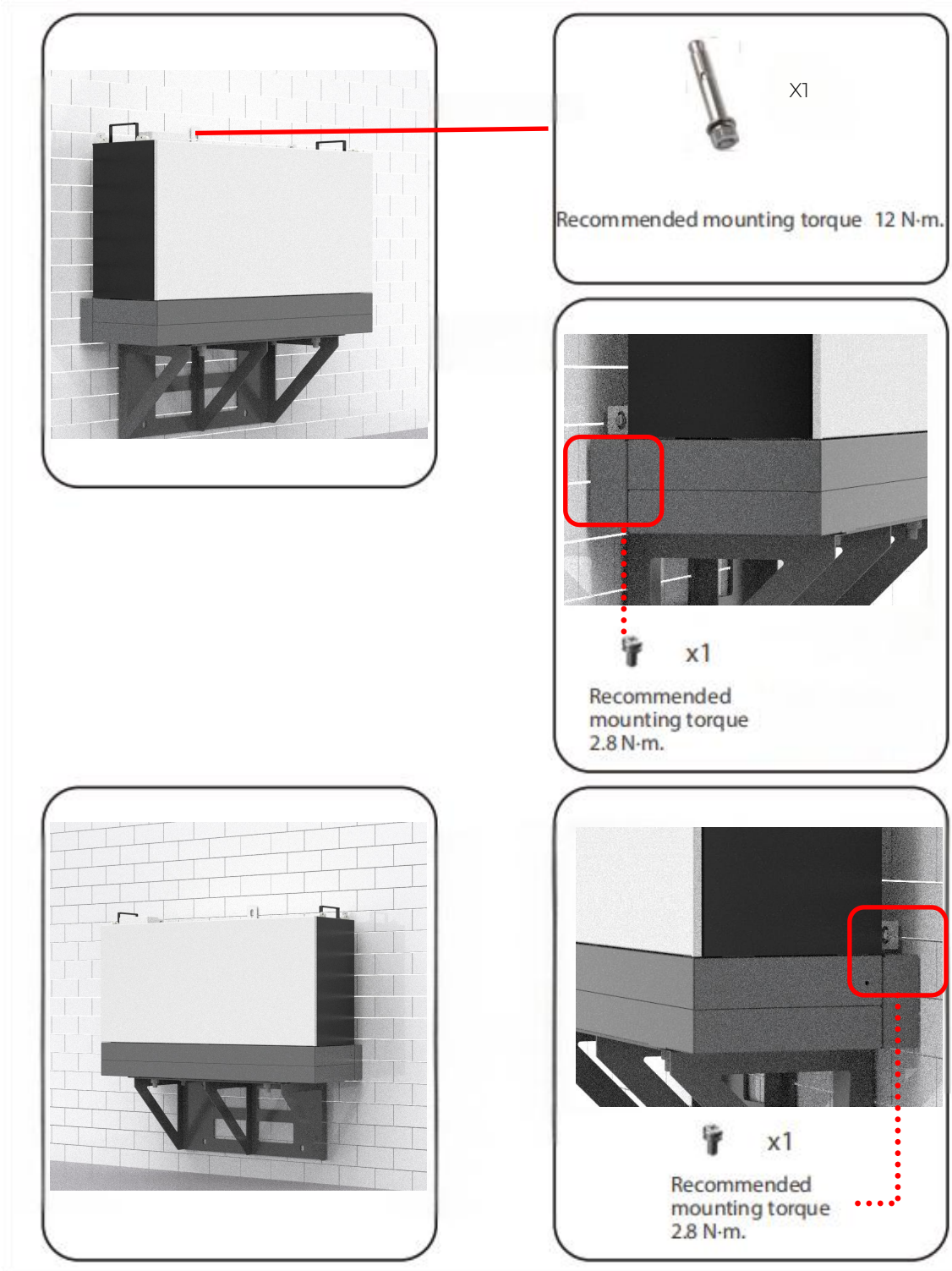

Note:

The battery pack is very heavy. Please use proper lifting techniques to avoid potential injury. It is recommended that two people lift the inverter.

©Dyness reserves the copyright of this document.

- Step6

Repeat step5 until you have installed the required number of battery packs.

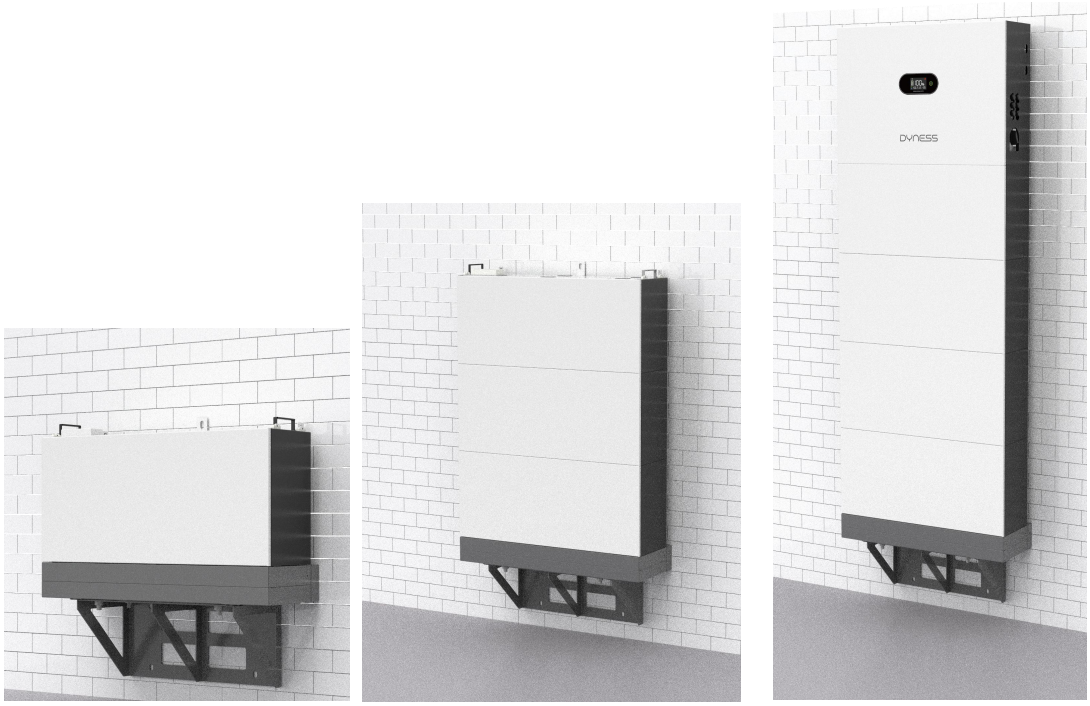

Note：

The battery pack is very heavy. Please use proper lifting techniques to avoid potential injury. It is recommended that two people lift the inverter.

- Step 7 Inverter installation

Install the inverter on the battery pack, locking side screw.

Install the Hanging Rack on the inverter, locking expansion screws secure the wall mounting plates.

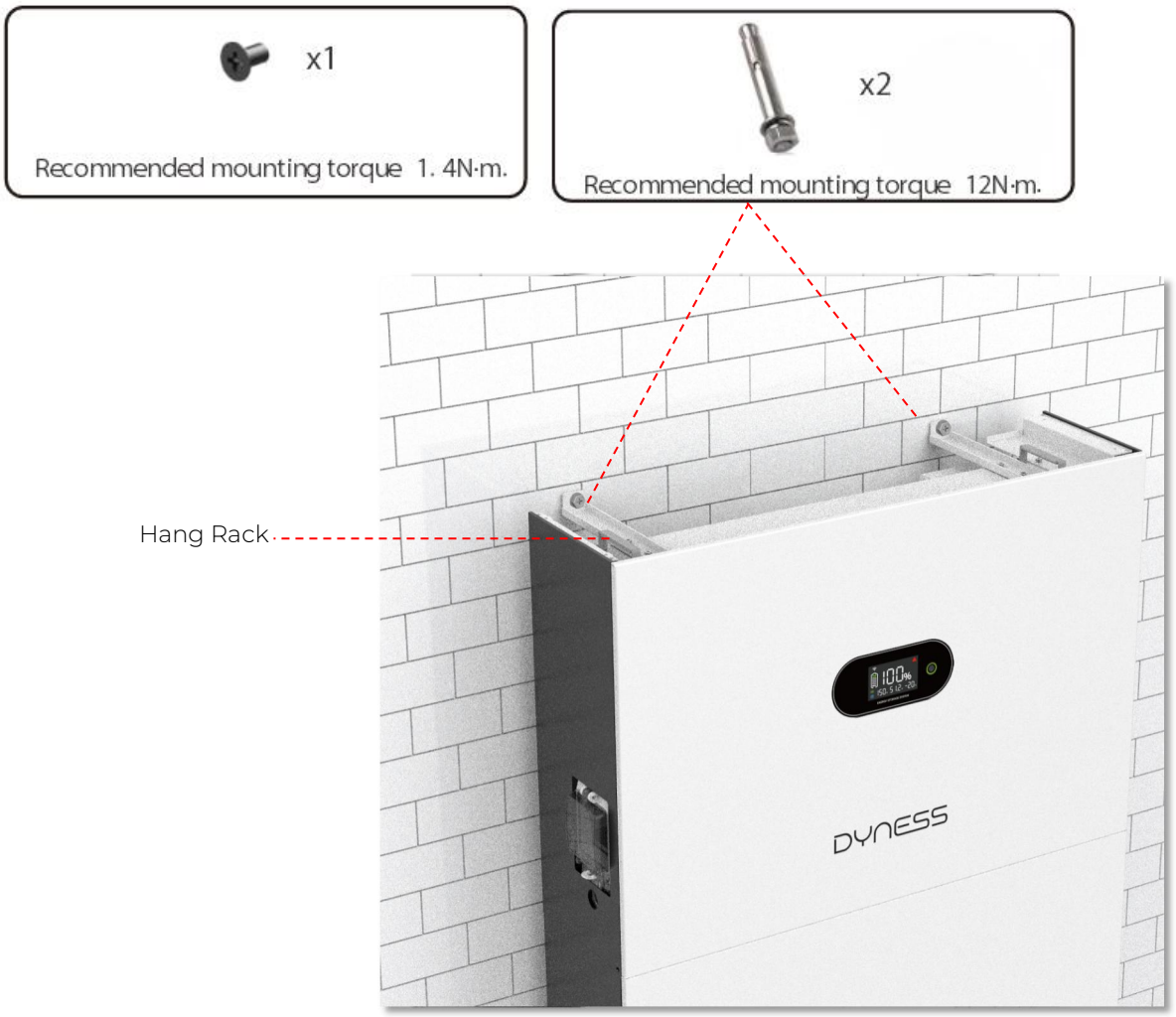

Note:

The battery pack is very heavy. Please use proper lifting techniques to avoid potential injury. It is recommended that two people lift the inverter.

©Dyness reserves the copyright of this document.

Install the sealing plate and cover plate upon completion of electrical and communication wirings.



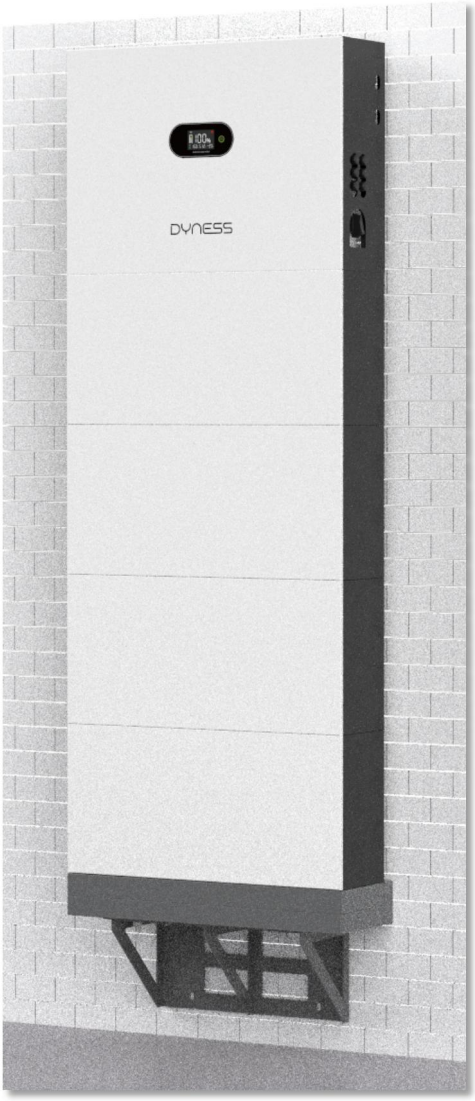

Note:
The battery pack is very heavy. Please use proper lifting techniques to avoid potential injury. It is recommended that two people lift the inverter.

5 Electrical Connection

5.1 System connection diagram

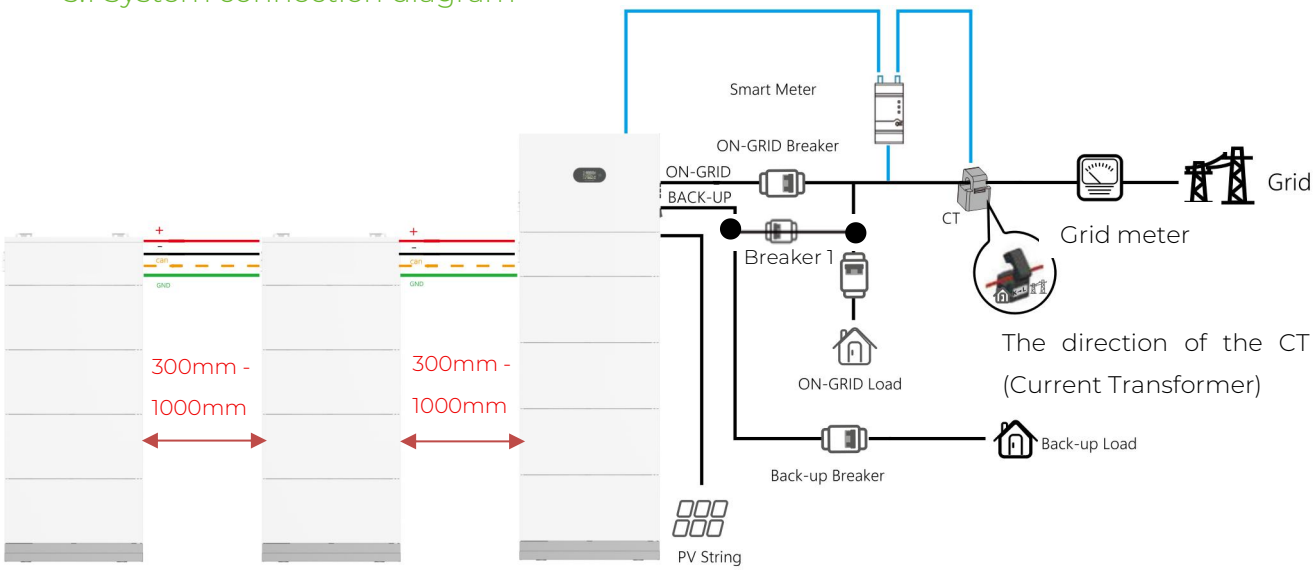

Considering the demand for instantaneous overload, there is a margin in the selection of battery switch, and the 63A model is chosen to prevent accidental tripping; During normal operation, the battery voltage and current are protected by software and hardware limitations, and this switch mainly provides protection in the event of a short circuit on the battery side.

CAUTION

Circuit Breaker 1 is a maintenance switch. It must remain disconnected during normal inverter operation; otherwise, the inverter may be damaged. When the inverter is inactive, users may close this switch to power the back-up load.

The direction of the CT (Current Transformer) must point towards the power grid. When all the configurations have been installed, please open the APP for one - click self - inspection to check if the CT direction is correct. For the one - click self - inspection operation, please refer to the APP instruction manual.

5.2 Cables prepared by customers

NO.	Cable	Recommended specifications
1	PV Connection Cables(only for Cygni HS series)	4mm²
2	ON-GRID connection cable	10mm²
3	BACK-UP connection cable	10mm²
4	Grounding cable	10mm²

5.3 Wiring

Danger

©Dyness reserves the copyright of this document.

Before installing the PV cables, ensure PV Strings are isolated. Use a multimeter to verify that the PV string voltages are 0V before going next step.

- External ground Connection of the PGND cable

Procedure 1 Get ready of ground cable using the OT terminal connector

Precautions：

Use the Yellow-green cable.

When stripping the cable, do not scratch the core of the cable.

Make sure the cable conductor is not exposed.

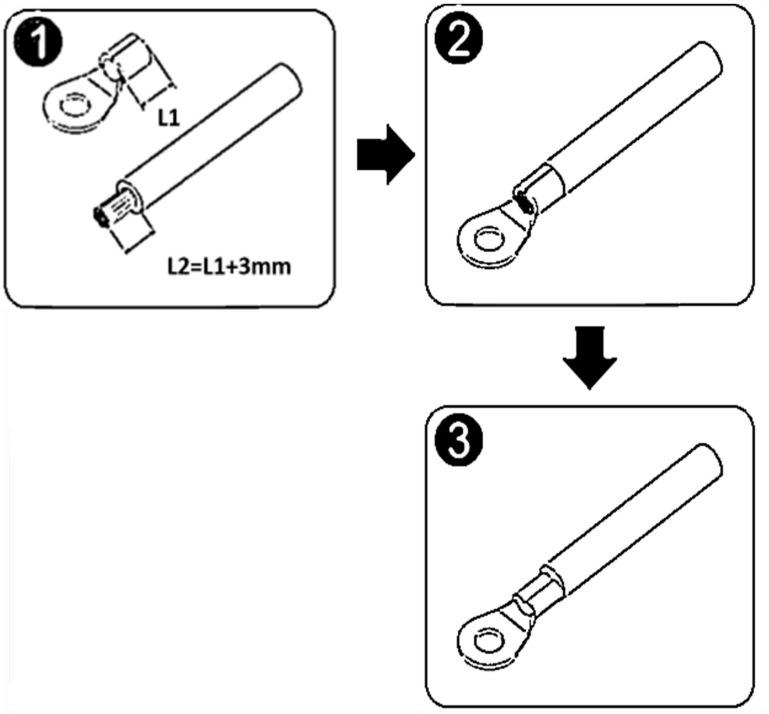

Procedure 2 connect the premade ground cable to the right position (shown on the following picture) and make it is fixed tightly.

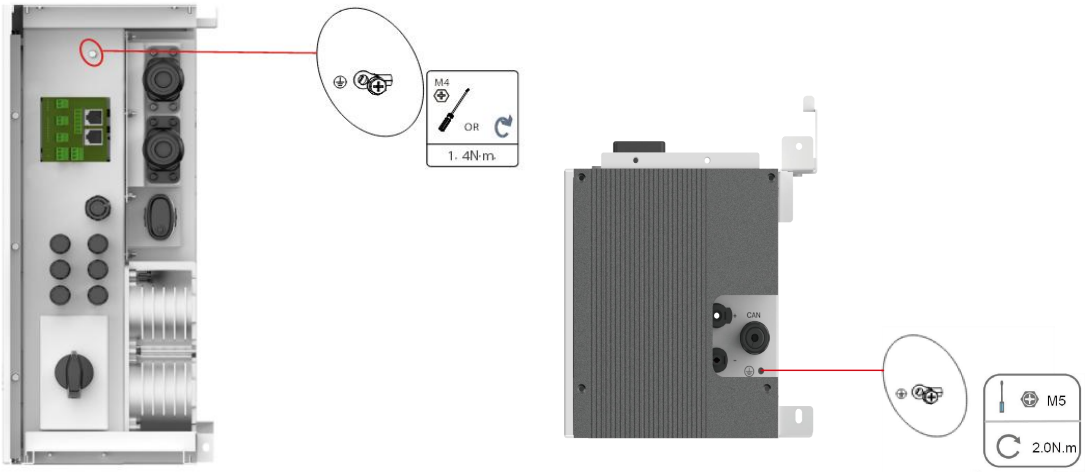

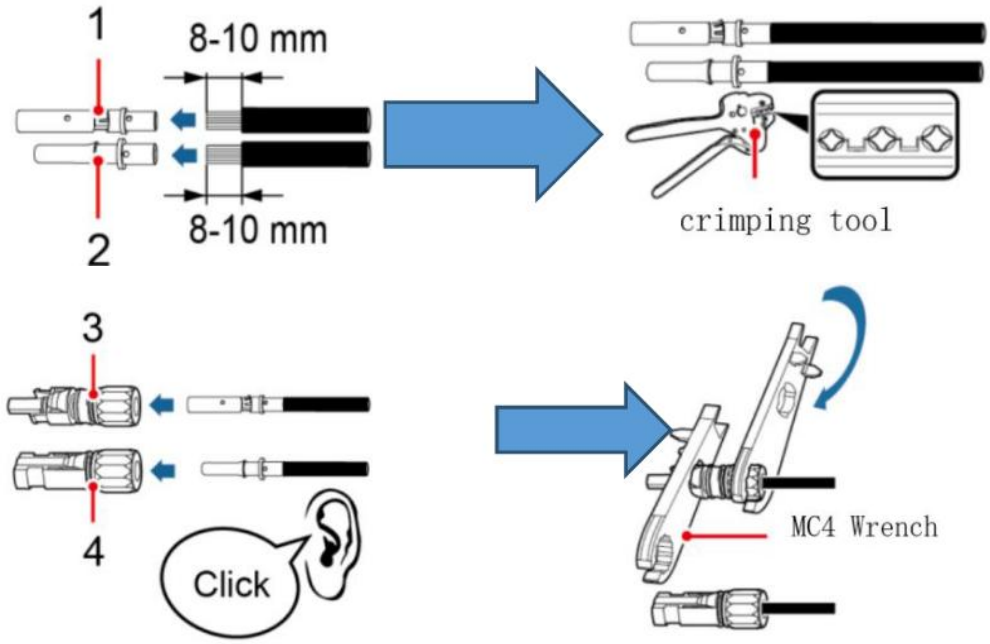

- PV Strings connection

Precautions:

Ensure the OCV (Open-Circuit Voltage) of the PV strings will not exceed the maximum DC input voltage (600Vdc).

Ensure the polarities of solar strings are connected to inverter correspondingly.

Ensure the PV isolator and OCPDs are turned off and the inverter is totally isolated from any DC or AC power.

Ensure the PV resistance to ground is higher than 20K ohms.

Ensure that the Isc of the strings will not exceed the maximum solar input current spec. of the inverter.

Recommended solar input cable specifications

PV connection cable		External cable
Range	Recommended value	diameter(mm2)
4.0~6.0	4.0	4.5~7.8

Connection Procedure:

No.	Definition
1	Male Connector
2	Female Connector
3	Male plug
4	Female plug

- Step 1 Prepare for solar male and female terminal Connectors
- Step 2 Put solar male and female terminal connectors to the plugs accordingly.
- Step 3 Connect PV connector

©Dyness reserves the copyright of this document.

Ensure that the DC voltage of each PV string is less than 600V and the polarity of PV cables are correct.

Connect the ready solar plugs to the inverter accordingly until a click is heard.



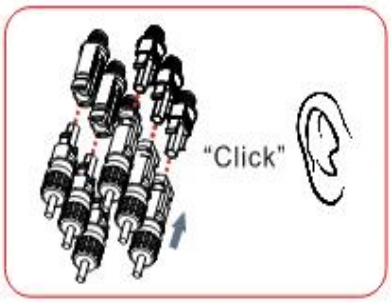



Note：Ensure that the DC switch is turn off before removing the PV connectors. Otherwise the inverter warranty might exempted.

5.4 Disconnect the PV connector using an MC4 wrench

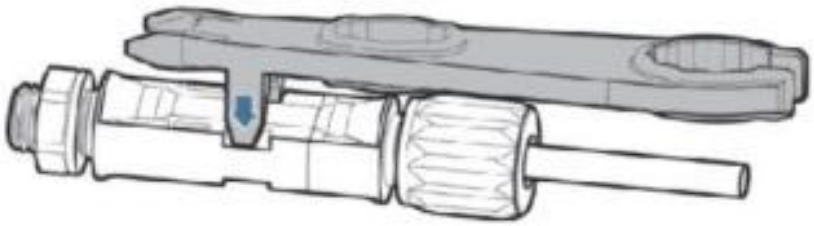

ON-Grid & BACK-UP connection

Danger

Before installing the AC cables, ensure the inverter is isolated from any DC or AC power and the OCPDs (AC breakers) are all turned off.

Use a multimeter to verify that the AC string voltages are 0V before proceeding.

Dimension of stripping line outside machine

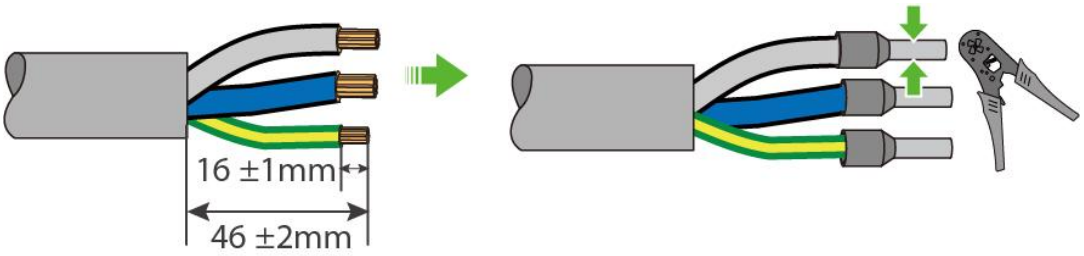

Installation Step

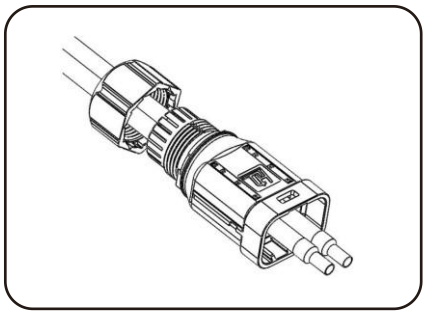

A

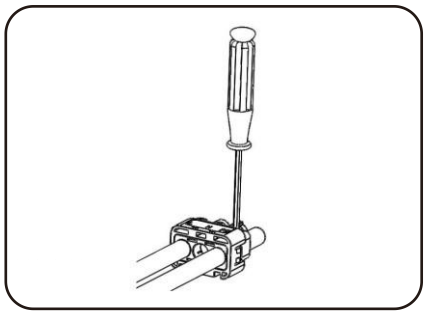

B

A: Cut the jacket of the cable and crimp the AC terminals with the cable core tightly.

B: Put the ready cable through the AC connector cover.

C: Lock the terminals to the cable connector tightly.

Note: Make sure the cable sequence of L/N/PE is rightly matched. Torque 2.0± 0.1n.m

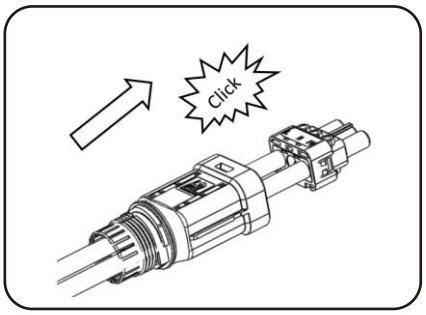

C

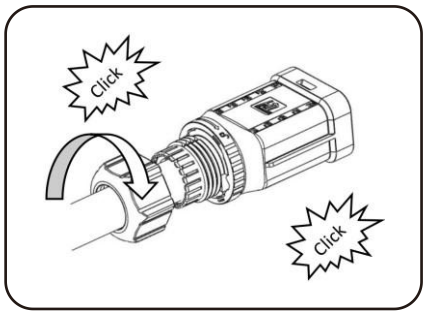

D

D: Pull the cable to inset the connector to the cover. A click sound means the connector is rightly positioned. sound me

E: Pull the cable to inset the connector to the cover. A click sound means the connector is rightly positioned.

F: Insert the read connector kit to the male AC connector on the inverter and a click sound means the connector is rightly positioned.

©Dyness reserves the copyright of this document.

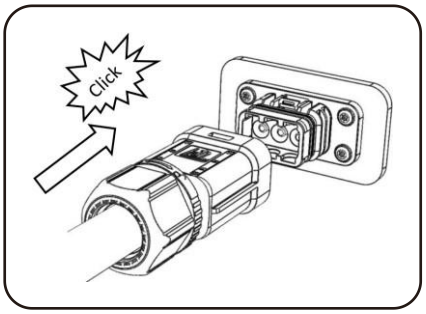

5.5 Connect the AC wiring terminals to the corresponding AC Grid ports

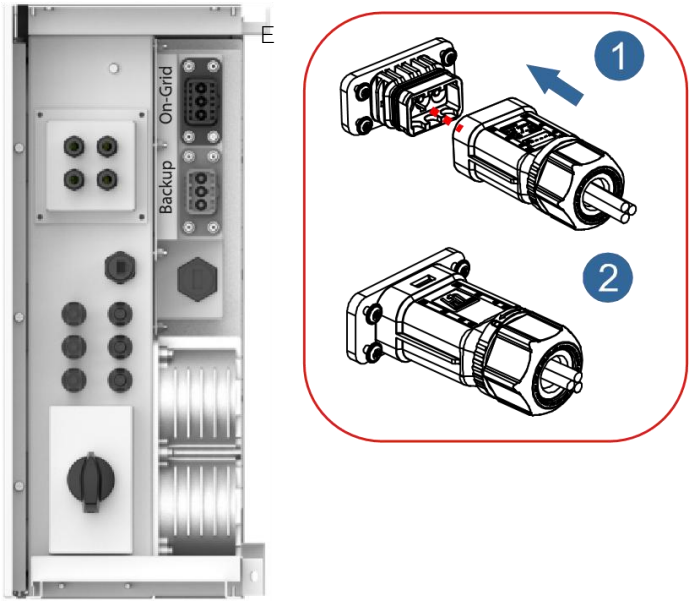

Removal Step

- Option 1

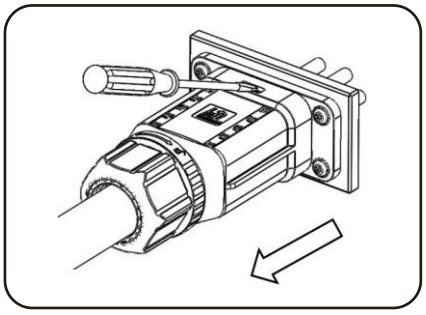

Use a screwdriver to point at the unlocking position, hold the cable driver, and pull it back to separate the male and female

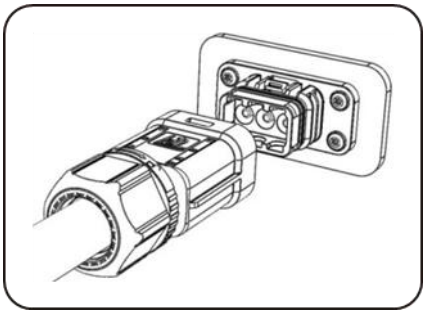

The female connector is separated from the board connector

- Option 2

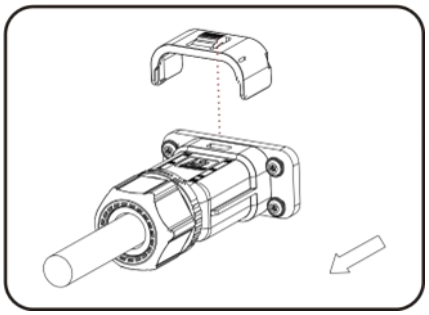

Use a tool to point at the unlocking position, hold the cable driver, and pull it back to separate the male and female

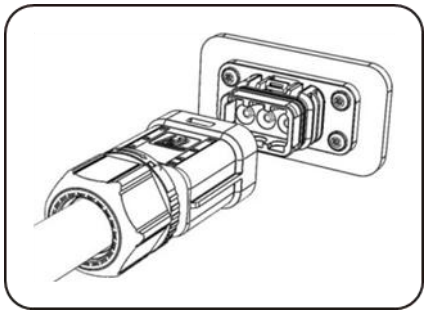

The female connector is separated from the board connector

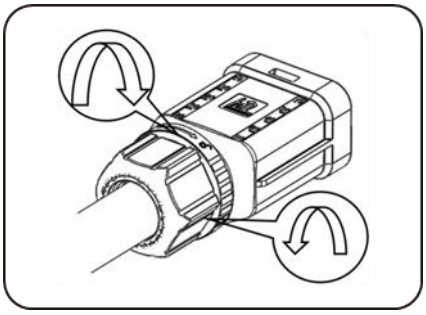

Hold the unlocking buckle with one hand and rotate it in the direction indicated, while rotate the nut in the opposite direction with the other hand

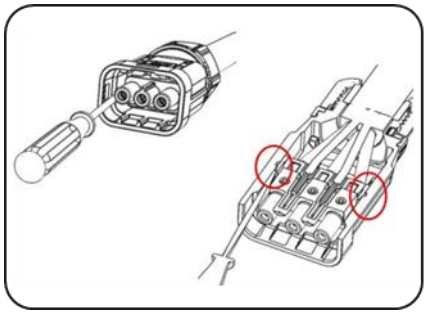

Remove the red circles on both sides using a screwdriver

©Dyness reserves the copyright of this document.

5.6 METER/CT Connection

Get ready of the communication cable kit

- Prepare the RJ45 cable according to the cable sequence

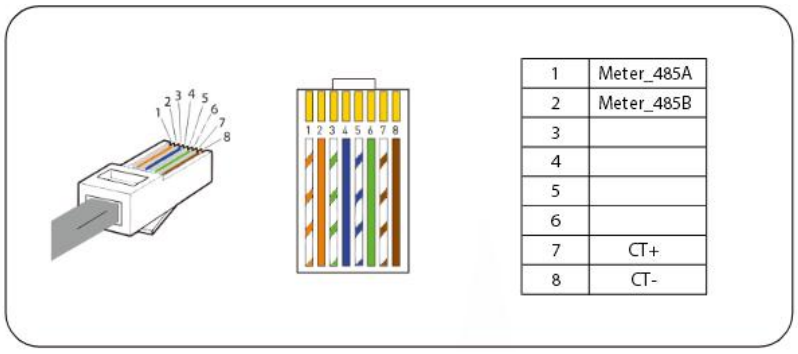

1	Meter_485A
2	Meter_485B
3	
4	
5	
6	
7	CT+
8	CT-

- Put the RJ45 cable through communication connector

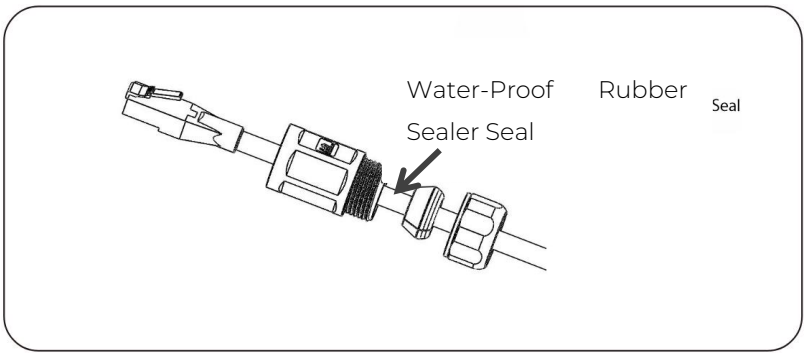

- Connect to inverter and tighten the cover. A click sound means the RJ45 connector is positioned rightly

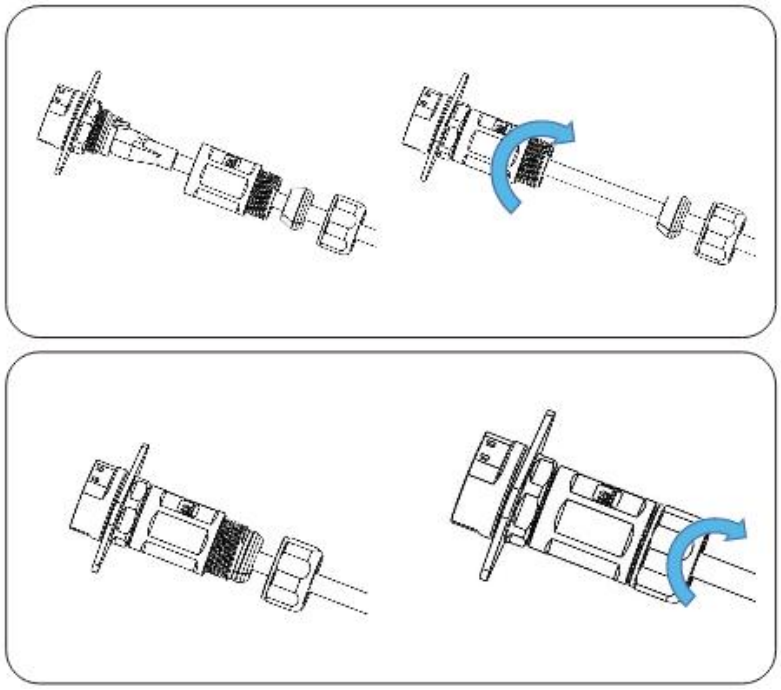

Note: Make sure the Meter communication cable is to the right position on the inverter (refer to 5.5)

Inverter and battery hub use the same terminals.

5.7 COM-Multi function communication connection

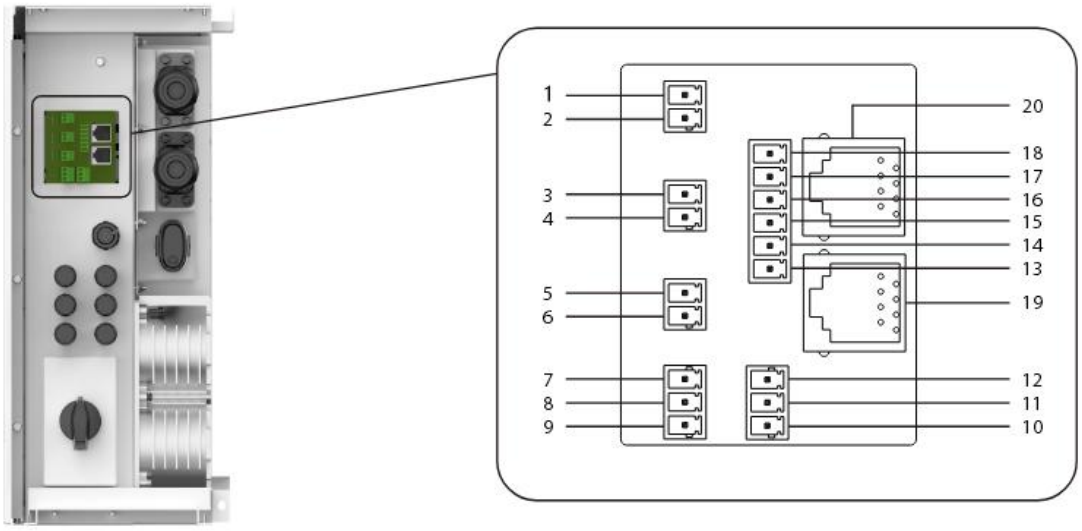

PIN	Port	Definition	Function
1	IO_IN	IO_IN+	Dry input
2		IO_IN-	
3	EMS	485+	485 Communication for EMS
4		485-	
5	SCD	485+	Reserved 485 Communication for SCD
6		485-	
7	DRY_OUT2	IO_OUT+	Dry output
8		-	
9		IO_OUT-	
10	DRY_OUT1	IO_OUT-	Reserved Dry output
11		-	
12		IO_OUT+	
13	DRM Port	DRM1/5	Demand Response Mode
14		DRM2/6	
15		DRM3/7	
16		DRM4/8	
17		RefGen	
18		Com/DRM0	
19	Parallel_2		For parallel connection(Reserved)
20	Parallel_1		

Note:

If DRM support is specified, the system may only be used in conjunction with a Demand Response Enabling Device (DRED). This ensures that the system implements the commands from the grid operator for active power limitation at all times. The system and the Demand Response Enabling Device (DRED) must be connected in the same network. Only DRM0 is available for Cygni.

©Dyness reserves the copyright of this document.

The enable and disable of the DRM function can also be set in the APP.Specifically, it's in the advanced Settings.

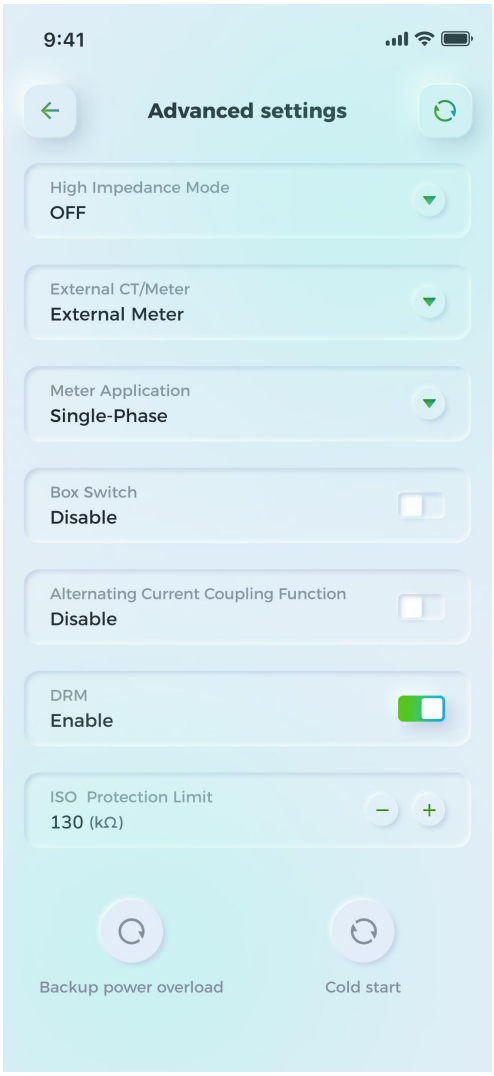

5.8 Smart Meter/CT Wirings Diagram

Danger

Smart Meter wiring could be electrically dangerous. Only a qualified electrician is allowed to operate following the steps and cautions.

1. Before connecting cables, ensure that the smart meter is not damaged.
2. Ensure that the ground cable is securely installed.
3. Before powering on the device, ensure that the cables are connected correctly.

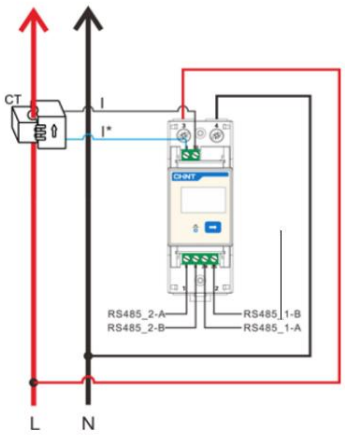

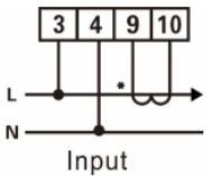

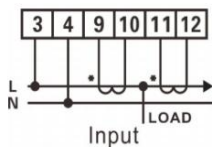

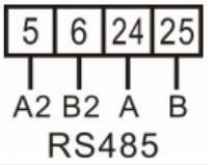

Voltage cable	L	3
	N	4
Ct1 cable	I1*	9
	I1	10
Voltage cable	L	3
	N	4
Ct1 cable	I1*	9
	I1	10
Ct2 cable	I2*	11
	I2	12
Communication cable	RS485_1A	24
	RS485_1B	25

Based on customer requirements, either CTSA016 or METER line can be selected for installation:

If CTSA016 is chosen: The crystal terminal connects to the inverter's METER terminal, and the CT transformer sleeve is connected to the L line of the inverter wire.

If METER line is chosen: The crystal terminal connects to the inverter's METER terminal, and the pin terminal is connected to the Smart Meter according to the wire label.

Note: Ensure the AC cable is isolated from AC power before connecting the Smart Meter and CT.

5.9 Equipment commissioning

The machine is already configured before leaving the factory, so there is no need for the user to configure it again.

1) Power ON

Step 1: Turn on the breaker between the inverter and the battery;

Step 2: Press the wake-up button for 5 seconds until the inverter LCD screen lights up;

Step 3: Turn on the PV breaker;

Step 4: Turn on the inverter ON-GRID breaker;

Step 5: Turn on the inverter BACK-UP breaker.

2) Power OFF

©Dyness reserves the copyright of this document.

Danger

1. When performing operation and maintenance on the inverter, please shut down the inverter. Operating equipment with a live connection can lead to damage to the inverter or electrical shock hazards.
2. After the inverter is disconnected, the internal components require a certain amount of time to discharge. Please wait until the device is fully discharged according to the label time requirements.

Step 1: Turn off the inverter ON-GRID breaker;

Step 2: Turn off the inverter BACK-UP breaker;

Step 3: Turn off the breaker between the inverter and the battery;

Step 4: Turn off the PV breaker.

3) Meet the functional requirements of DRM0

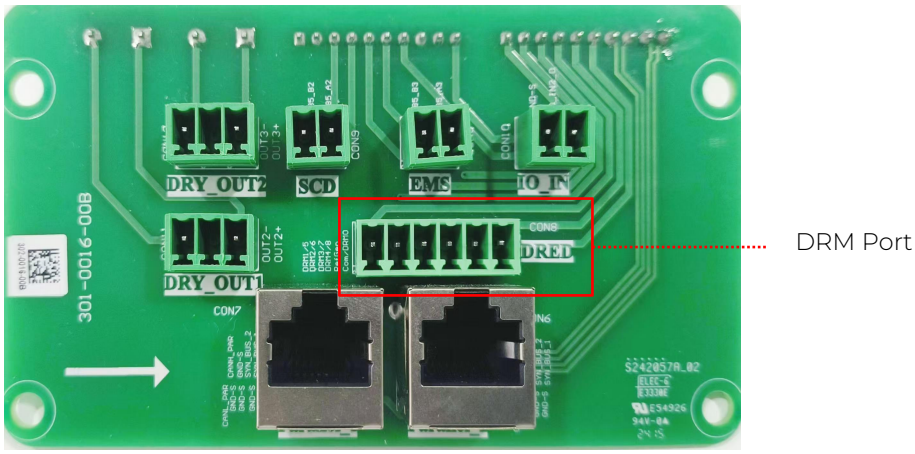

DRM 0✔	DRM 1 ☐	DRM 2 ☐
DRM 3 ☐	DRM 4 ☐	DRM 5 ☐
DRM 6 ☐	DRM 7 ☐	DRM 8 ☐

4) End-of-life disposal

When an inverter or battery is no longer usable and needs to be disposed of, please follow the electrical waste disposal requirements as specified by the laws and regulations of your country or region for handling the inverter or battery. They should not be treated as regular household waste.

5.10 Installation Instructions for the WiFi Module

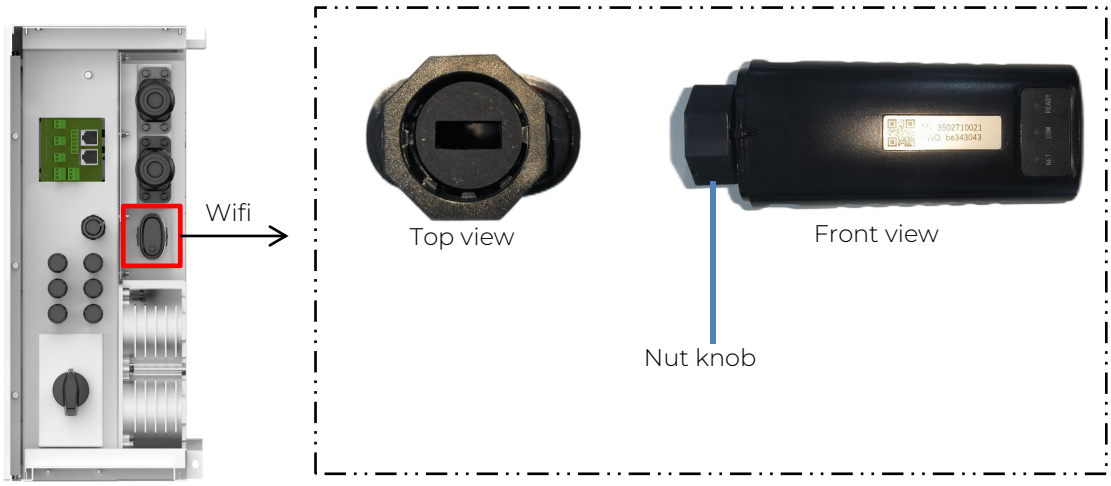

Step 1: Insert the WiFi module into the inverter.

Step 2: Rotate the nut knob clockwise until the WiFi module stops shaking.

Step 3:When all accessories and wiring are assembled, please scan the second page to download the APP. Refer to the APP to complete the time reset and CT one-click self-inspection function detection.

CAUTION

The installation and removal of the WiFi module must be performed by the installer. Customers are strictly prohibited from installing or removing the WiFi module privately. After completing all configuration installations, open the APP to perform a one-touch self-test to verify whether the current transformer (CT) direction is correct. For self-test procedures, refer to the 'APP user manual'. Ensure the time is set in the APP to match the local time; otherwise, the inverter will fail to operate normally.

Electrical System Diagrams

Do not connect this terminal to E-Bar of external distribution box if neutral continuity in maintained throughout the distribution system.

For Australia/New Zealand

CAUTION

This product does not support multiple inverters used in combination. Possible combinations are single-phase inverters used in parallel, single-phase inverters used in multiple-phase installations and three-phase inverters used in parallel.

©Dyness reserves the copyright of this document.

5.11 Installation Instructions for the Battery Hub

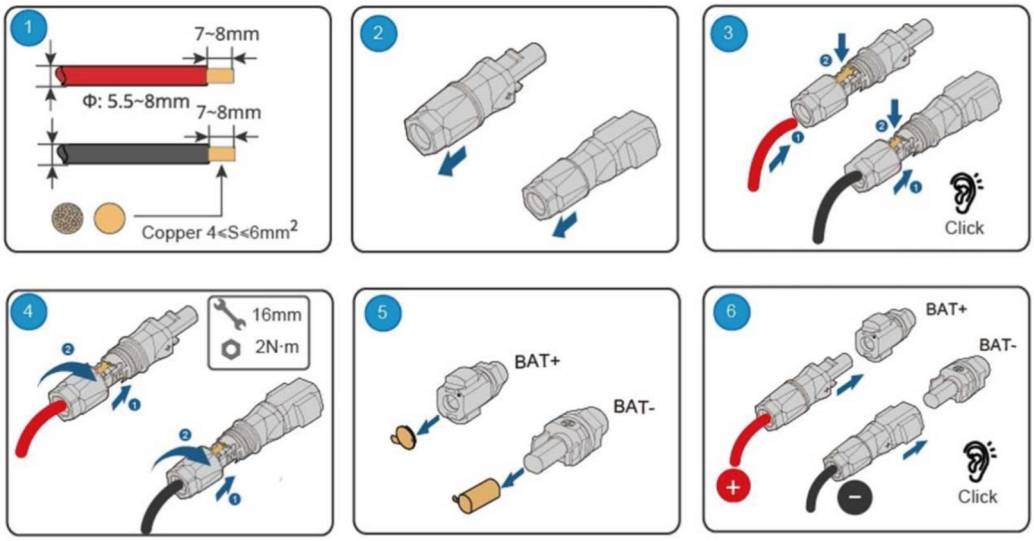

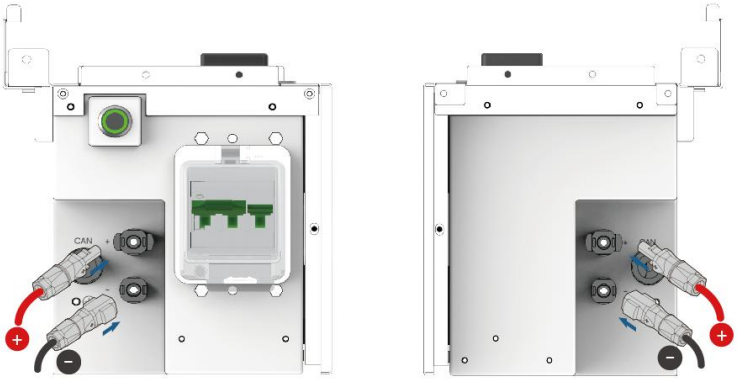



HS series

Other regions except Australia/New Zealand

AC Breaker specification parameter: 8K Rated current ≥50A Rated voltage ≥400V

10K Rated current ≥63A Rated voltage ≥400V

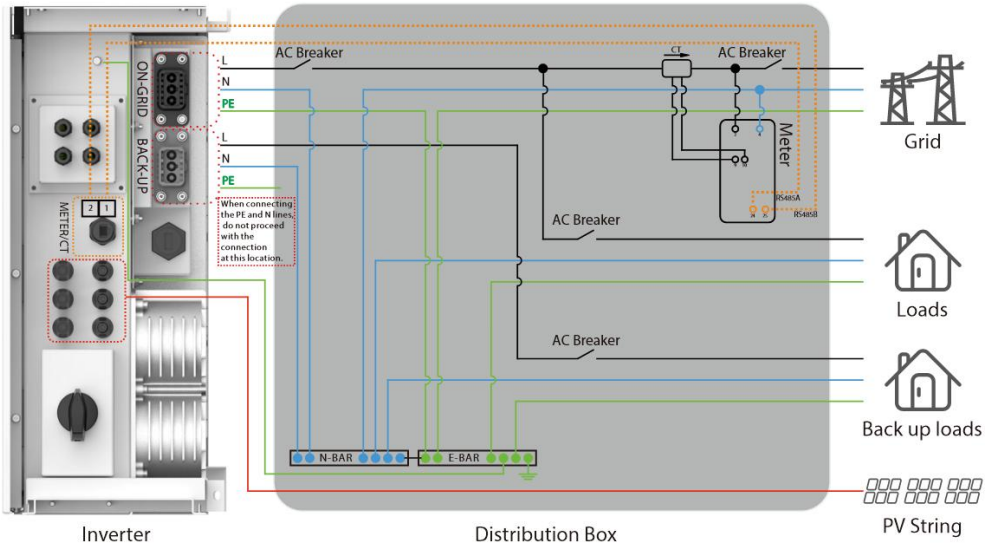

Other regions except Australia/New Zealand

AC Breaker specification parameter : 8K Rated current ≥50A Rated voltage ≥400V

10K Rated current ≥63A Rated voltage ≥400V

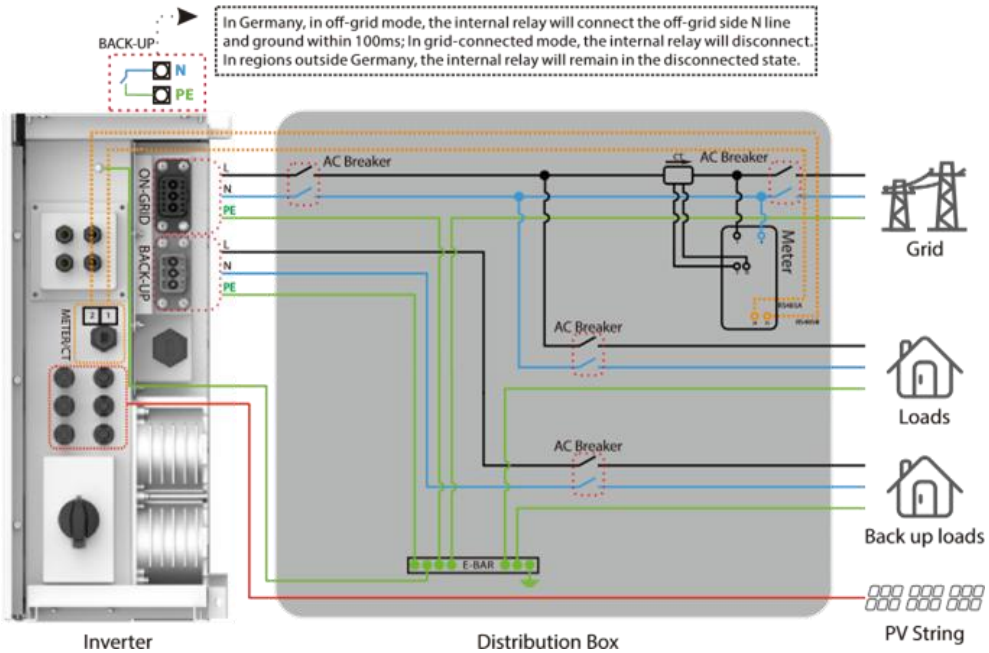

5.12 Multi-unit Parallel Installation

- Battery Cluster Parallel Expansion Instructions

©Dyness reserves the copyright of this document.

1. Refer to 5.1 System Connection Diagram for the wiring schematic of multiple parallel battery clusters. Connect the positive/negative power cables, CAN communication cables and protective earth wires of each battery cluster in accordance with the diagram.

2. A terminating matching crystal head resistor must be fitted to the communication port of the last slave battery hub on the CAN communication link. Omission of this resistor will lead to communication faults and abnormal system operation.

- Termination Resistor Installation Procedures

1. Cut off the power supply of the entire system, and locate the dedicated CAN communication port on the Battery Hub at the far end of the entire CAN communication link, as shown in the figure below.

2. Insert the termination resistor into this CAN port only; do not plug it into any other ports.

3. Tighten the connector lock nut clockwise to fasten the plug and complete the installation of the termination resistor.

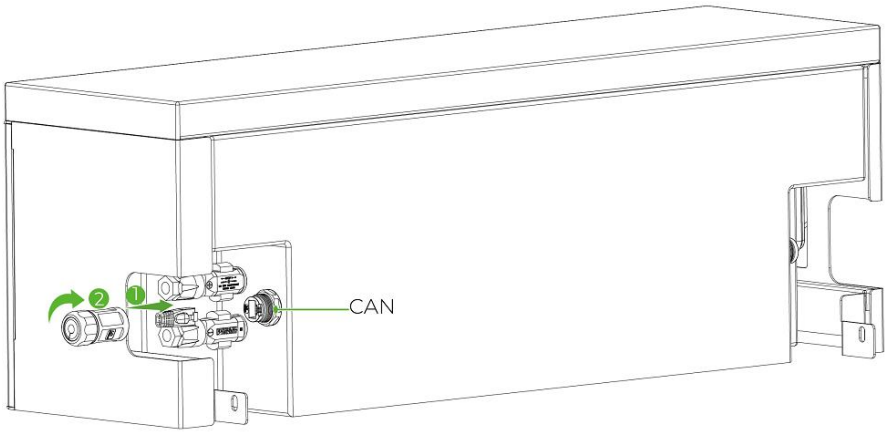

Note: The terminating resistor shall only be installed on the end device of the communication link. No terminating resistor is required for intermediate devices on the link.

6 Quick Settings

After creating the power plant with the APP, the customers can click the device to select the safety regulation country and work mode in Basic Settings . Also can set the protective parameters in Advanced settings and can view the firmware version in Firmware Upgrade.

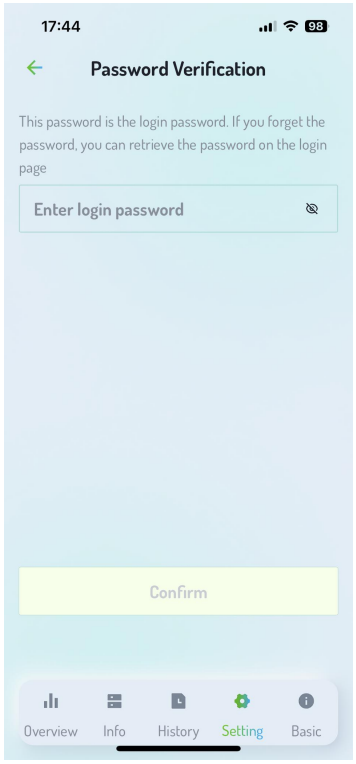

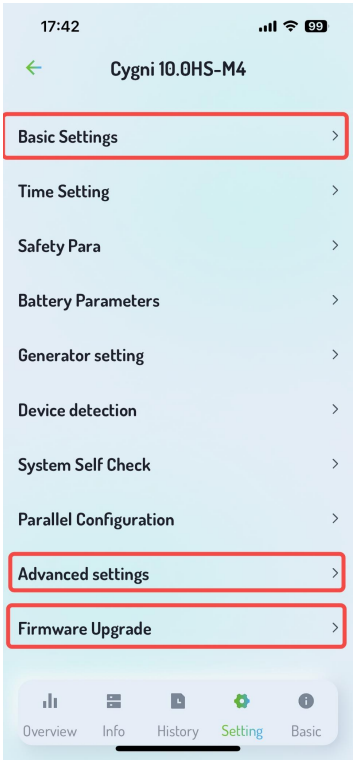

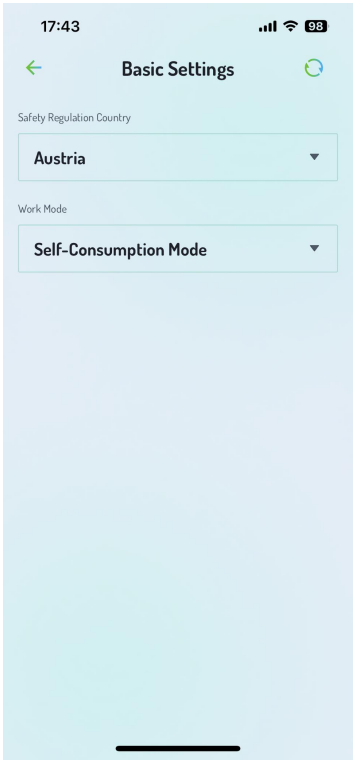

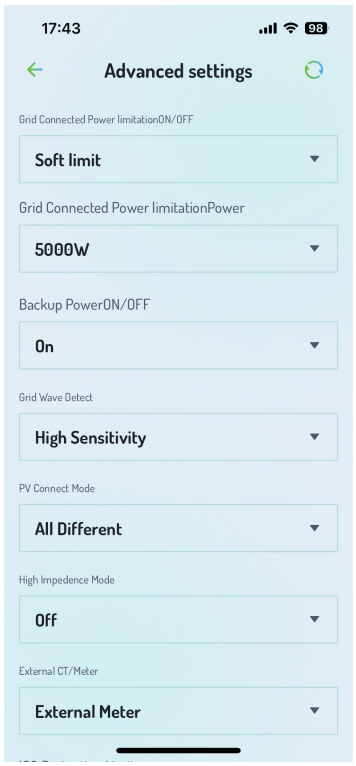

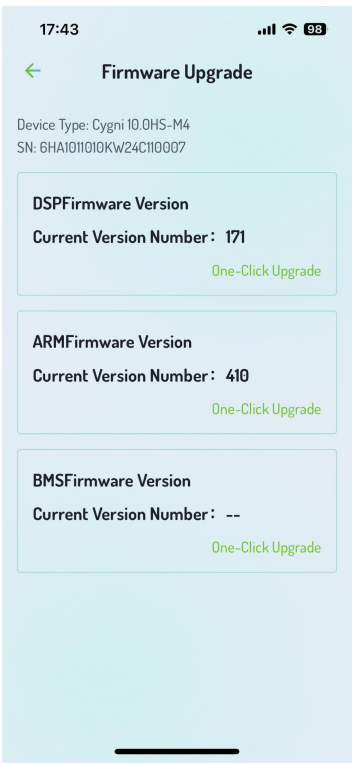

©Dyness reserves the copyright of this document.

The parameters will be configured automatically after selecting the safety country/region, including overvoltage protection, undervoltage protection, overfrequency protection, underfrequency protection, voltage/frequency connection protection, cos Φ curve, Q(U) curve, P(U) curve, FP curve, HVRT, LVRT, etc. You can also enable/disable power quality response modes as follows:

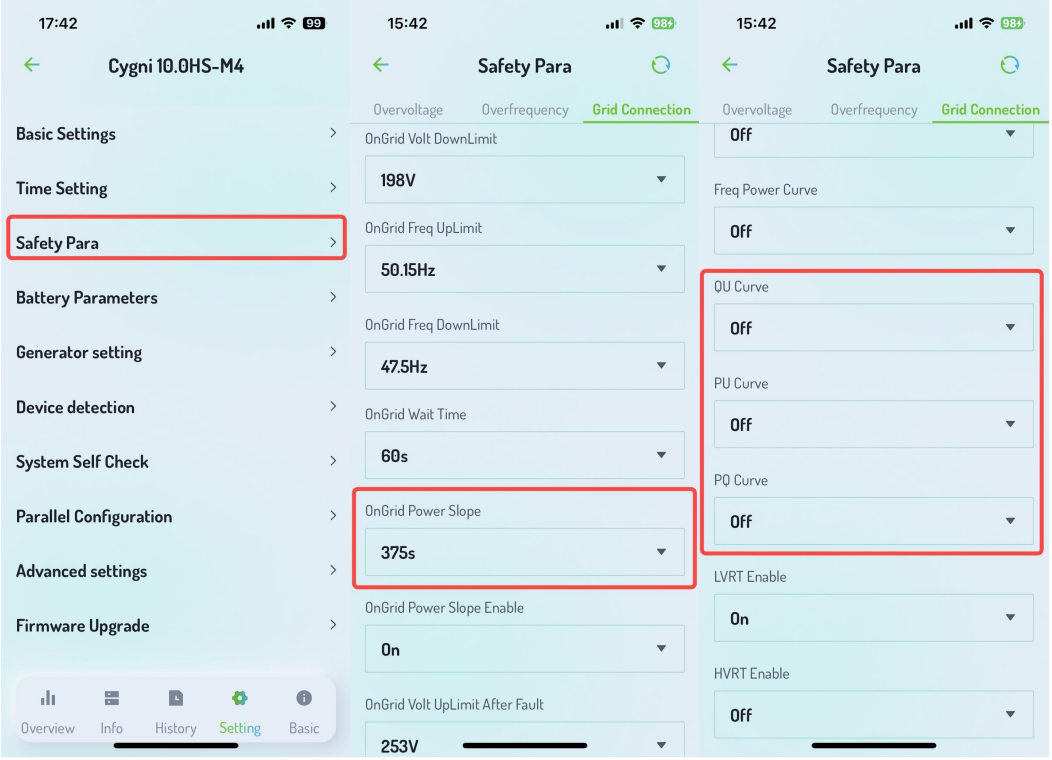

7 System Maintenance

7.1 Routine Maintenance

The product is disassembled, changed or updated on software or hardware without authorization from the manufacturer.

The Product is installed, used, or operated against any related provisions contained in international or local policies or regulations.

Any incompatible batteries, loads or other devices are connected to the HS system.

Specifications are subject to change without notice. Every effort has been made to make this document complete, accurate and up-to-date. However, Dyness may need to make some improvements under certain circumstances without advance notice. Dyness shall not be responsible for any loss caused by this document including, but not limited omissions errors,typographical errors, arithmetical errors or listing errors in this document.

If you have any questions or suggestions, please contact Dyness after-sale.

Note: The manufacturer retains the right to explain all of the contents in this User Manual. To insure product must be sealed well; please install the products within one day of unpacking; otherwise, please seal all unused terminals /holes; unused terminals/holes are not allowed to remain open, and confirm that there

Maintaining Item	Maintaining Method	Maintaining Period
System Clean	Check the heat sink, air intake, and air outlet for foreign matter or dust.	Once 6-12 months
DC Switch	Turn the DC switch on and o ten consecutive times to make sure that it is working properly.	Once a year
Electrical Connection	Check whether the cables are securely connected. Check whether the cables are broken, or whether there is any exposed copper core.	Once 6-12 months
Sealing	Check whether all the terminals and ports are properly sealed. Reseal the cable hole if it is not sealed or is too big.	Once a year

©Dyness reserves the copyright of this document.

7.2 Troubleshooting

Fault phenomenon	Factor analysis	Elimination method
No display after the instrument being powered on	1. Incorrect wiring mode. 2. Abnormal voltage supplied for the instrument.	1. If the wiring mode is incorrect, please connect based on the correct wiring mode (see the wiring diagram). 2. If the supplied voltage is abnormal, please supply the voltage on the instrument specification.
Abnormal RS485 communication	The RS485 communication cable is disconnected, short circuit or reversely connected. The address, baud rate, data bit and the parity bit of the instrument is not in accordance with the product.	If any problems with the communication cable, please change the cable. Set the address, baud r ate, data bit and parity bit of the instrument to be the same as the product through buttons and soas the "parameter setting".
Power metering inaccuracy	1.Wrong wiring, please check whether the corresponding phase sequence of voltage and current is correct. 2. Check whether the high and low ends of the current transformer inlet are reversely connected. Pa, Pb, and Pc are abnormal if the values are negative.	1. For wrong wiring, please connect based on the correct wiring mode (See the Smart Meter & CT connection diagram 2. If a negative value is displayed, change the cable connection mode of the current transformer to ensure that the high and low ends are connected properly.

7.3 Error Messages.

The error messages below will be displayed on the App or reported by e-mail if an error occurs.

Grid Loss(Not available of public grid power)		E10
REASON	Product does not detect the connection of grid or the grid voltage fault.	
SOLUTIONS	Check connections and grid switch to ensure grid power is available. Make sure AC cables are connected tightly and right well.	
VAC High/Low(Grid voltage is not within permissible range)		E25/26
REASON	Product detects that the AC voltage is beyond the normal.	
SOLUTIONS	Check the AC voltage is in the range of standard voltage in the specification. Check connections and grid switch. Ensure the safety country of the product is set right.	
FAC High/Low(Grid Efficiency is not within permissible)		E27/28
REASON	Product detects that Grid frequency is beyond the normal range required by the safety country.	
SOLUTIONS	Check whether frequency is in the range of specification or not. 2. Ensure the safety country of the product is set right.	
DC Input High(PV or battery voltage is too high)		E16
REASON	The total voltage (open circuit voltage) of each PV string is higher than the max DC input voltage of the product. Or The battery voltage is higher than the max BAT input.	
SOLUTIONS	Check the PV input voltage. Do not exceed the range of specifications.2. Check the battery input voltage.	
ISO Fault(PV isolation protection)		E19
REASON	Isolation failure could be caused by multi reasons like PV panels not grounded well, DC cable is broken, PV panels are aged or surrounding humidity is comparatively heavy, etc.	
SOLUTIONS	Use a multimeter to check if the resistance between the earth & product frame is about zero. If it's not, Please make the connection earth & product frame well. Remove all DC input, reconnect and restart the product one by one. Identify which string causes the fault and check the isolation of the string.	
Over Temperature(Temperature inside of the product is too high)		E14
REASON	Product working environment leads to a high-temperature condition	
SOLUTIONS	Check the product surrounding ventilation. Check if there's sunshine direct on the product in hot weather.	
GFCI Fault(The ground leakage current is high)		E1

©Dyness reserves the copyright of this document.

REASON	Neutral & ground cables are not connected well on the AC side or just occasional failure
SOLUTIONS	Check using a multi-meter if there is a high voltage (normally should be lower than 10V) between the N&PE cable on the AC side.
DC Injection High(High DC injection current)	E20
REASON	Product detects a higher DC component in AC output
SOLUTIONS	Try to restart the product, and check if it still happens, if not, means it is just an occasional situation or contact the manufacturer.
EEPROM Fault(EEPROM R/W fails)	E31
REASON	Caused by a strong external magnetic field etc.
SOLUTIONS	Try to restart the product, and check if it still happens, if not, means it is just an occasional situation or contact the manufacturer.
Comm Fault(Internal communication fails)	E32
REASON	Caused by a strong external magnetic field etc.
SOLUTIONS	Try to restart the product, and check if it still happens, if not, means it is just an occasional situation or contact the manufacturer.
DC Bus High(BUS voltage is over-high)	E12
REASON	PV or battery voltage is too high
SOLUTIONS	Try to restart the product, and check if it still happens, if not, means it is just an occasional situation or contact the manufacturer.
Back-Up Over Load(Back-up side is over loaded)	E21
REASON	The total Back-Up load power is higher than the nominal backup output power
SOLUTIONS	Check the load of the backup port is over-rating output power or not. Reduce the load of the backup port, then restart the product.

7.4 Disclaimer

The Dyness D series products are transported, used and operated under environmental and electrical conditions.

The manufacturer has the right to not provide after-sales services or assistance under the following conditions:

- The product is damaged during the transfer.
- The product is out of the warranty year and an extended warranty is not purchased.
- The product is installed, set, or operated in improper ways without authorization from the manufacturer.
- The product is installed or used under improper environmental or technical conditions (as mentioned in this User Manual) and without authorization from the manufacturer.
- The installation or configuration of the product does not follow the requirements mentioned in this User Manual.
- The product is installed or operated contrary to the requirements or warnings mentioned in this User Manual.

- The product is broken or damaged by any force majeure, such as lightning, earthquake, re-hazard, storm and volcanic eruption etc.

©Dyness reserves the copyright of this document.

8 Technical Specifications

Technical Data	Cygni8.0HS						
	M2	M3	M4	M6	M8	M9	M12
Battery Input Data							
Battery Type	LiFePO4						
Expandable Quantity	2	3	4	6	8	9	12
Number of Cygni Battery Hub	0	0	0	2	2	3	3
Nominal Energy(kWh)	7.68	11.52	15.36	23.04	30.72	34.56	46.08
Usable Energy(kWh)	7.30	10.94	14.59	21.89	29.18	32.83	43.77
Operating Voltage(V)	168~219	252~328	336~438	252~328	336~438	252~328	336~438
Nominal Voltage(V)	192	288	384	288	384	288	384
Nominal Capacity(Ah)	40						
Max.Charge/Discharge Current(A)	39						
Max.Discharge Power(kW)	7.68	8.8	8.8	8.8	8.8	8.8	8.8
Max.Charge Power(kW)	7.68	8.8	8.8	8.8	8.8	8.8	8.8
Max.DOD (Depth of Discharge) (%)	95						
Operating Temperature Range(℃)	0~50						
Cycle Life	≥8000Cycles, 70%SOH						
Alarms	Overcharge/Overdischarge/Overcurrent/Overtemperature/Short Circuit						
Safety Regulation	IEC 62619/IEC 60730						
Technical Data	Cygni10.0HS						
	M2	M3	M4	M6	M8	M9	M12
Battery Input Data							
Battery Type	LiFePO4						
Expandable Quantity	2	3	4	6	8	9	12
Number of Cygni Battery Hub	0	0	0	2	2	3	3
Nominal Energy(kWh)	7.68	11.52	15.36	23.04	30.72	34.56	46.08
Usable Energy(kWh)	7.30	10.94	14.59	21.89	29.18	32.83	43.77
Operating Voltage(V)	168~219	252~328	336~438	252~328	336~438	252~328	336~438
Nominal Voltage(V)	192	288	384	288	384	288	384
Nominal Capacity(Ah)	40						
Max.Charge/Discharge Current(A)	39						

Max.Discharge Power(kW)	7.68	11	11	11	11	11	11
Max.Charge Power(kW)	7.68	11	11	11	11	11	11
Max.DOD (Depth of Discharge) (%)	95						
Operating Temperature Range(℃)	0~50						
Cycle Life	≥8000Cycles, 70%SOH						
Alarms	Overcharge/Overdischarge/Overcurrent/Overtemperature/Short Circuit						
Safety Regulation	IEC 62619/IEC 60730						

PV String Input Data	Cygni8.0HS	Cygni10.0HS
Max.PV Input Power (W)	12000	15000
Max.PV Input Voltage (V)	600	
Maximum inverter backfeed current to array	0A	
MPPT Range (V)	60-550	
SPS Start-up Voltage (V)	60	
MPPT Voltage Range For Nominal Power (V)	180-500	210-500
Nominal DC Input Voltage (V)	390	
Max.Input Current (A)	16/16/16	16/16/16
Max.Short Current (A)	23/23/23	23/23/23
No.of MPP Trackers	3	3
No.of Strings per MPP Tracker	1	

AC Output Data(On-grid)	Cygni8.0HS	Cygni10.0HS
Nominal Apparent Power Output to Utility Grid (VA)	8000	9999
Max.Apparent Power Output to Utility Grid (VA)	8000	9999
Max.Power From Grid (VA)	8000	9999
Nominal Output Voltage (V)	230	

©Dyness reserves the copyright of this document.

Nominal Output Frequency (HZ)	50	
Inrush current（Peak and duration）	135.8A /3us	
Rated/Max.AC Current Output to Grid(A)	34.8	43.5
Rated/Max.AC Current From Grid (A)	34.8	43.5
Maximum output fault current（Peak and duration）	135.8A /3us	
Output Power Factor	Adjustable from 0.8 leading to 0.8 lagging	
Input Icc	≤10kA	
Output THDi (Nominal Power)	< 3%	

AC Output Data (Back-up)	Cygni8.0HS	Cygni10.0HS
Max.Output Apparent Power(VA)	8000	10000
Peak Output Apparent Power (VA)	9600,60sec	12000,60sec
Rated/Max.Output Current (A)	34.8	43.5
Inrush current（Peak and duration）	135.8A /3us	
Nominal Output Voltage (V)	230 (Without Transformer)	
Nominal Output Frequency(Hz)	50	
Maximum output fault current（Peak and duration）	135.8A /3us	
Output THD v (@Linear Load)	<3%	
Backup ups（ms）	<10	
Generator input	NO	
Efficiency	Cygni8.0HS	Cygni10.0HS
MPPT efficiency	99.9%	
Max.Efficiency	97.5%	
Europe Efficiency	97.0%	
Protection	Cygni8.0HS	Cygni10.0HS

Anti-island Protection	Integrated	
PV String Input Reverse Polarity Protection	Integrated	
Battery Reverse Protection	Integrated	
Residual Current Monitoring Unit	Integrated	
Over Current/Voltage Protection	Integrated	
DC Switch (PV)	Integrated	
Fire Protection System	Built-in aerosol fire extinguisher	
Surge Protection	DC Type II/ AC Type III	
Communication Interface	Cygni8.0HS	Cygni10.0HS
Battery BMS	CAN	
EMS	RS485	
Meter	RS485	
E-Stop	YES (DI)	
Dry-Point	YES (DO)	
Communication	Wi-Fi; Bluetooth	
Display	LCD; APP; Web	
General Data	Cygni8.0HS	Cygni10.0HS
Topology	Non-Isolated	
Operating Temperature Range (℃)	0-50	
Relative Humidity (%)	0-95	
Operating Altitude(m)	3000	
Cooling	Natural Convection	
Noise(dB)	< 35	
Installation	Wall hanging & Floor type	
Enclosure Type	IP 66	
Active anti-islanding method	Active frequency perturbation method	
Pollution degree classification	3(External Environment），2(Internal Environment)	
Storage type	Li-Ion	
-Protective class (I, II or III)	Class I	
Over voltage category (OVC I, II, III or IV)	II(DC), III(AC)	

©Dyness reserves the copyright of this document.

Inverter topology (Isolated or non-isolated)	Non-isolated
Ingress protection (IP) rating	IP66

General Data	Cygni8.0HS	Cygni10.0HS
Decisive voltage class (DVC)	BAT C PV C AC C COM A	BAT C PV C AC C COM A
Maximum inverter backfeed current to the array	0A	0A
The maximum output overcurrent protection for each AC output port	65A	65A
AC surge protection	Class III	Class III
AC Surge Protection Time	20 ns	20 ns

Technical Specifications

Mode	Weight(kg)	Size(W/H/D)(mm)
Cygni 8.0HS-M2	113.2	650x1130x180
Cygni 8.0HS-M3	153.7	650x1430x180
Cygni 8.0HS-M4	193.7	650x1730x180
Cygni 8.0HS-M6	292.5	650×1630×180/650×1180×180
Cygni 8.0HS-M8	372.5	650×1930×180/650×1480×180
Cygni 8.0HS-M9	425	650×1630×180/650×1180×180/650×1180×180
Cygni 8.0HS-M12	545	650×1930×180/650×1480×180/650×1480×180
Cygni 10.0HS-M2	113.2	650x1130x180
Cygni 10.0HS-M3	153.7	650x1430x180
Cygni 10.0HS-M4	193.7	650x1730x180
Cygni 10.0HS-M6	292.5	650×1630×180/650×1180×180
Cygni 10.0HS-M8	372.5	650×1930×180/650×1480×180
Cygni 10.0HS-M9	425	650×1630×180/650×1180×180/650×1180×180
Cygni 10.0HS-M12	545	650×1930×180/650×1480×180/650×1480×180

Technical Specifications

General Data	Cygni8.0HS	Cygni10.0HS
Warranty（year）	10	
Safety Regulation	IEC 62109-1/2, IEC 62040, IEC 62619:2022	
EMC	IEC/EN 61000-6-1/3, EN 62920:2017/A1:2021	
Grid Regulation	AS/NZS 4777.2：2020	
Manufacturer	Daqin Digital Energy Technology Co., Ltd.	
Country of Manufacture	China	

Function	Cygni8.0HS	Cygni10.0HS
Protection Parameter Setting	Obtain security codes and corresponding protection parameters by APP.	
Regional Setting	Set security codes of regional settings(Australia, Australia B, Australia C） by APP.	
Anti Backflow Setting	Set anti backflow switch (off, soft limit, hard limit) and limited power by APP.	

©Dyness reserves the copyright of this document.

DISCOVER YOUR NATURE

Address: 7th–8th Floors, Building 3 No. 58
Nanhu Road Chengnan Subdistrict, Wuzhong
District Suzhou, China
Email: service@dyness-tech.com
Tel: +86 400 666 0655
Web: www.dyness.com

Official
Website

Digital version
access